PUMP OPERATION MANUAL

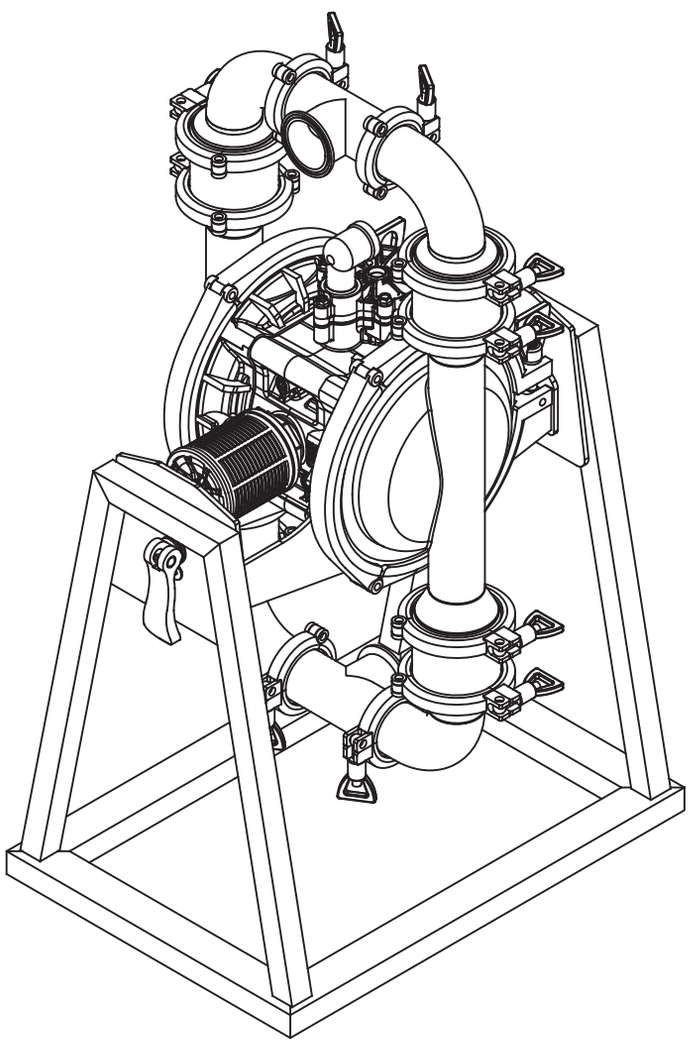

For safety purposes please be sure to read and follow the instructions contained within this manual before pump installation and operation.

D500SWFR

Introduction

Thank you for Purchasing this our company Air Operated Double Diaphragm Pump. Diaphragm Pumps fall under the positive-displacement pump category. They are powered by compressed air and transfer liquids through the movement of 2 diaphragms connected by a center shaft. The pump runs through the use of an air switching mechanism which diverts air to each diaphragm in turn on a continuous fashion. Depending on the liquid to be transferred, pumps are available in a variety of body materials including; aluminum, stainless steel, cast iron, polypropylene, polyvinylidene fluoride. The diaphragms and valves within the pump are also available in various rubber, plastic and thermoplastic elastomers each with its own chemical resistance properties.

Table of contents

Introduction 1
Important Items 2
For safe operation 2

For safety ..... 3 ～ 5

Product information ..... 6 ～ 9
1.Specifications 6
2.Accessories included with the pump 6
3.Names of parts and materials 7
4.Dimensions 8
5.Performance curves 9

Installation ..... 10 ～ 14
1.Installing and connecting the pump 10
2.Recommended liquid piping connection diagram 12
3.Recommended air piping connection diagram 13
4. How to rotate the pump 14

Operation ..... 15 ～ 17
1.Pump start up 15
2.Liquid flow adjustments 15
3.Stopping the Pump 15
4.Releasing pressure 16
5.Method of cleaning the pump 16

Maintenance ..... 18 ～ 22
Daily Maintenance checks 18
Troubleshooting 19

Limited Factory Warranty 23

While pump is in operation do not cover the liquid inlet port with your hand or any another part of your body.
If the pump has remained unused for a long period or if you have any kind of misgivings about running the pump please consult with your local our company distributor or contact our company directly.

Important Items

For safe operation

● Before using the pump, be sure to read this document carefully, particularly the ″warnings and cautions,″ and be fully familiar with the correct operating procedures.

● Within this document all the warnings and cautions will be indicated by the following symbols.



WARNING If you ignore the warning described and operate the product in an improper manner, there is danger of serious bodily injury or death.



CAUTION If you ignore the caution described and operate the product in an improper manner, there is danger of personal injury or property damage.

Furthermore, to indicate the type of danger and damage, the following symbols are also used along with those mentioned above:



This symbol indicates a DON'T, and will be accompanied by an explanation on something you must not do.



This symbol indicates a DO, and will be accompanied by instructions on something you must do in a certain situation.



This symbol indicates important information is contained here.

For safety

⚠ WARNING

・When using compressed gas (hereinafter referred to as ″compressed air″) to drive this pump, be sure it is one of the following:

1)Compressed air supplied from an air compressor

（To drive this product, use supply air with a minimum moisture content.）

2)Nitrogen (N2) gas

The use of compressed air other than those mentioned above may cause air pollution, damage to the pump, or even an explosion.

・Pressure Ratings are dependent on pump material and liquid temperature variations.

Please see the ″Liquid Temperature Correlation Graph″ in the [5. Performance curves] and check for the allowable operating pressure at the specific temperature of the liquid being pumped. Air pressure and discharge pressure must not exceed the allowable operating pressure. If air pressure and discharge pressure exceed the allowable operating pressure, it may cause liquid leaks, damage to the pump casings or diaphragms and could cause a fatal accident.

・Before moving this product, make sure that the internal pressure is released. If the pump is moved while under pressure, any shock imparted by knocking or dropping the pump etc. may damage the pump or even cause an explosion.

・Improper electrical grounding, poor ventilation, or unshielded fire or spark can create a danger of fire or explosion.

Therefore, the following precautions are strongly advised.

＊ All peripheral equipment and piping connected to this product should be properly grounded.

＊ To pump flammable liquids, use a model with a conductive aluminum or stainless-steel casing.

＊ Whenever you notice any spark while operating this product, immediately stop its operation, and do NOT start using it again unless you are sure of the cause and corrective actions have been taken out.

＊ Depending upon the type of fluid being pumped, bubbles of flammable gas may be generated. Make sure that ventilation is satisfactory.

＊ This product itself, its piping and exhaust ports should be kept away from unshielded fire, spark and other causes of ignition. If a diaphragm is damaged, fluid may gush out together with air from the exhaust port.

＊ Do NOT leave gasoline or solvent etc. that contains waste at the work site.

＊ Machinery and other equipment near the place of installation of this product should be properly insulated to prevent electrical conduction with each other.

＊ Do NOT operate heating devices naked flames or have heating filaments anywhere near the pump or its piping.

＊ If there are flammable gases in the immediate atmosphere while the pump is operating, do NOT switch electric appliance on and off.

＊ Do NOT operate gasoline engines around the pump work site.

＊ Restrict smoking around the pump work site.

For safety

⚠ WARNING

- Before using this product, be sure you are familiar with the precautions regarding the fluid to be pumped, and verify the corrosion resistance of the parts that will come into contact with the fluid (wetted parts). NEVER use the product with any fluid against which it does not have sufficient corrosion resistance or with a fluid that poses a risk of explosion. If you are unsure of the corrosion resistance, contact your nearest distributor or our company directly. If you use this product with any fluid against which the parts that will come in contact with the fluid do not have sufficient corrosion resistance, it may result in damaging the product or leakage of fluid or pump failure.

- When using this product, observe local relevant regulatory rules concerning transfer and storage of chemicals, fire prevention, labor safety standards, etc.

- Hazardous fluids (such as strong acid or alkali, flammable or toxic liquids) or gas bubbles generated by such fluids may cause serious injury or even death if accidentally inhaled or consumed or if they come into contact with the eyes or adhere to the skin. Therefore, the following precautions are strongly advised.
  *Be fully familiar with the properties of the fluid to be pumped and work in strict accordance with the operating instructions provided by the suppliers of such fluids (such as wearing goggles, gloves, mask or protective work clothes).
  *When storing a hazardous fluid, strictly comply with the regulatory procedures (such as using proper containers, storage conditions, etc.).
  *Install the piping and exhaust port of this pump away from areas frequented by human and animal traffic if there is a risk that transferring liquids may affect the human body.

- In case of transferring a high temperature fluid, casing and piping heated and may cause burns by touching.

For safety

⚠ CAUTION

- If a diaphragm of this product is damaged, the supplied air may mix with the fluid or the fluid may flow into the main body (air-switching portion). If the air supply is inadequate or the pump is contaminated, do NOT operate the pump.

- After you shut down the pump and disconnect the piping, some fluid may still be remaining inside the pump. Also, if the pump is left unused for a prolonged period, some fluid may remain inside the pump and within the connected piping. Therefore, be sure to purge the system of fluid and clean the pump before prolonged disuse or storage. If the product is left unused for a prolonged period with fluid remaining in the connected piping as well as the pump itself, the fluid may expand, depending on the ambient temperature (because of freezing or heat), which may cause damage to the pump and/or piping and possible leakage of fluid.

- The Pumps Non wetted parts are made from various materials and are not designed to withstand corrosive chemicals. Therefore there is a possibility of damage to the pumps non wetted parts through leaks or breakage of the diaphragm as well as liquid or gas permeation through the actual diaphragm material. There is also a possibility of damage due to chemical fumes in the local environment or fumes entering into the air line through the compressor. It is also possible to damage these components when incorrect lubrication is used. To help prevent any unnecessary damage please follow the following precautions. Ventilation of the local environment, remove liquids when the pump is not in use. (Long term). Open ventilation of the switching area of pump. Clean and flush the pumps air switching section if a leak or diaphragm breakage occurs.

- For safe transport be sure to prevent liquid leaking from pump for safe transport.
  It is the end-users responsibility to thoroughly wash and clean the pump(s) to prevent accidents caused by liquid leaks.

- Always use genuine parts when replacing component parts of this product. Do not attempt to modify the components parts or replace them with anything other than genuine parts.

Product information

1.Specifications

Model	D500SWFR
Liquid port	Equivalent to Ferrule 2.0S
Material・Weight	Table 1
Operating pressure	0.2 ～ 0.7 MPa [30-100 psi]
Max discharge pressure	0.7 MPa [100 psi]
Discharge volume/Cycle	1000 mL
Max Discharge volume	330 L/min [87.2 Gallon/min]
Max air consumption	4000 L/min (ANR) [141.3 SCFM]
Max solid size	8 mm or less
Limitation of viscosity	Self-priming 3 Pa・s or less　Force In 8 Pa・s or less
Ambient temperature	0 ～ 70 ℃ [32-158 ℉]
Liquid temperature	0 ～ 100 ℃ [32-212 ℉]
Dimensions	Table 2
A-Weighted sound pressure level	97dB ※ 2
A-Weighted sound power level	105dB ※ 3

※ 1　The maximum discharge pressure of the pump depends on the liquid temperature. (Table 3)

※ 2　Measurement method of A-weighted sound pressure level is based on ISO 1996.

※ 3　Measurement method of A-weighted sound power level is based on ISO 3744.

2.Accessories included with the pump

☐ Pump Safety Manual.....1

☐ Airline ball valve.....1

☐ Silencer.....1

☐ Nipple.....1

⚠ CAUTION

- After delivery open the product packaging and check to make sure that all included accessories are present and in good order.
- Remember that the pump is heavy, so extreme care must be taken when lifting it. When lifting the pump using a chain hoist or crane, be sure to lift the pump by the specified lift point(s). Be careful that nobody will pass under the pump when you lift it. It will be very dangerous if the pump should fall.
- When installing the accessories, please use the pipe sealing tape as provided for each threaded position, Also take care that broken or shredded pipe sealing tape does not contaminate the liquid or Air inlets. Note that a contaminated airline may cause failure of the pumps air switching unit.
- Please install the air inlet Airline ball valve by referring to [Outside view] of [3.Name of parts and materials].

3.Names of parts and materials

Outside view

500SWFR

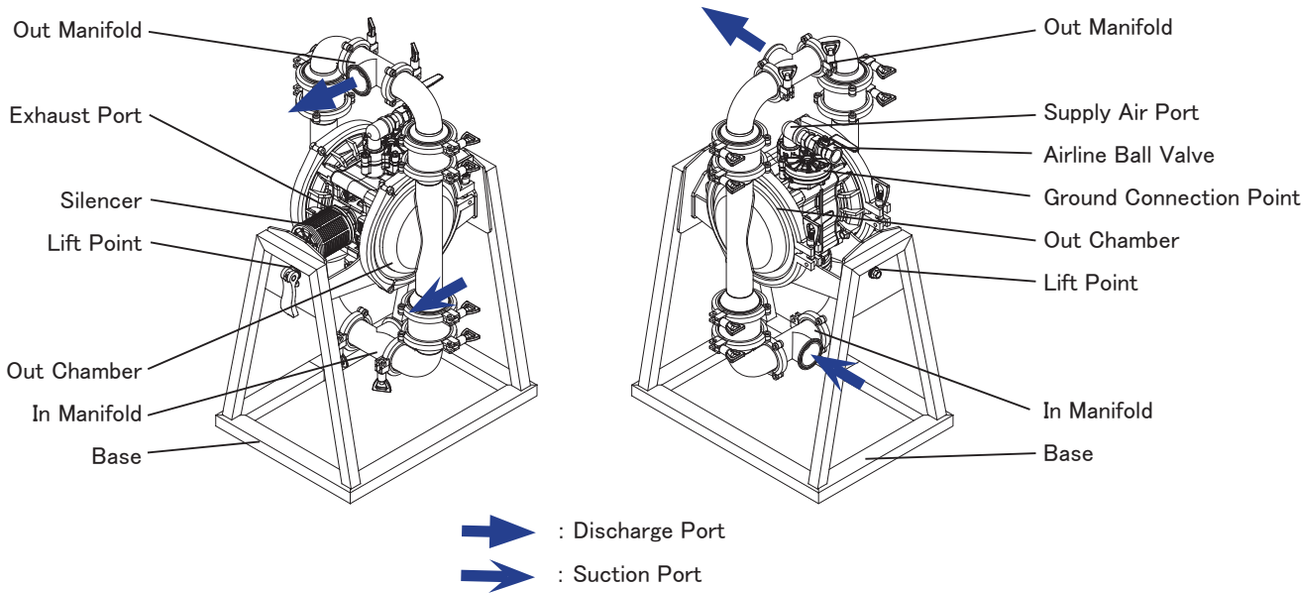

Material and weight

MODEL	500SWFR
Pump Wetted Parts	SUS316L
Diaphragm	PTFE・EPDM
Ball Valve	PTFE
Packing	PTFE/EPDM
Weight	41.0 kg [90.4 lbs]

Table 1

4.Dimensions

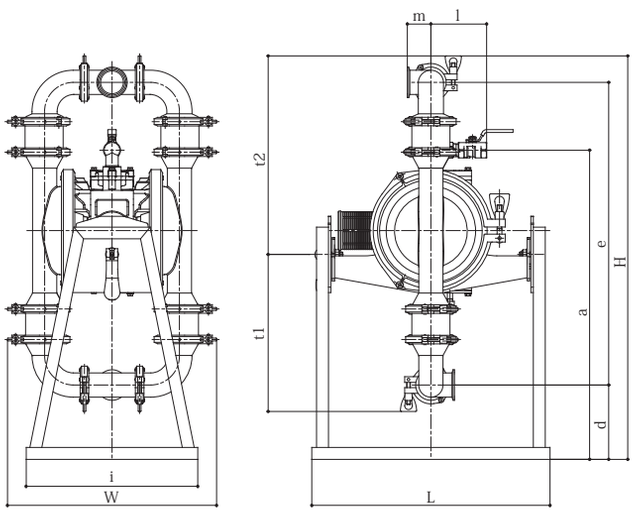

500SWFR

MODEL	H	W	L	a	d	e	i	l	m	t1	t2	AIR INLET	AIR EXH	LIQUID IN/OUT
500SWFR	846 [33.31]	451 [17.76]	500 [19.69]	649 [25.55]	156 [6.14]	635 [25.00]	360 [14.17]	117 [4.61]	50 [1.97]	330 [12.99]	416 [16.38]	Rc3/4	Rc1	Equivalent to Ferrule 2.0S

(Measure : mm [inch])

Table 2

5.Performance curves

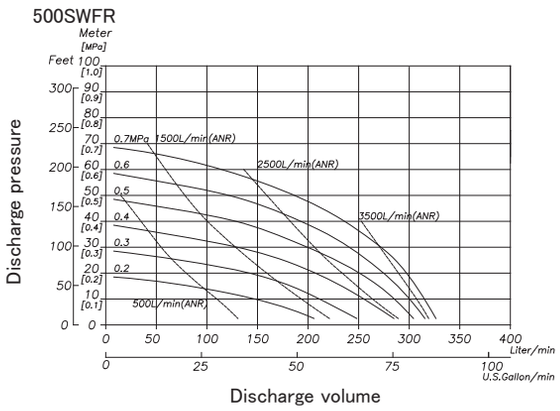

Air consumption

Performance curve

NOTICE

・The maximum discharge pressure varies depending on the temperature.Be sure to refer to the specifications and check the liquid temperature correction graph.

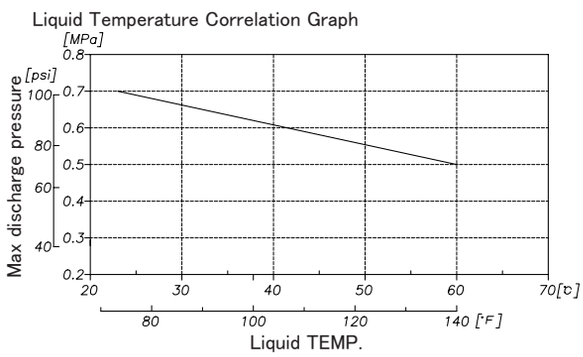

Table 3

NOTICE

・This is the measurement method used when determining the pumps performance curves. Please refer to the below measurement instruments and testing procedure.

Liquid pumped: Fresh water

Temperature: Ambient

Condition of suction:

Flooded suction 0 meter [0 ft]

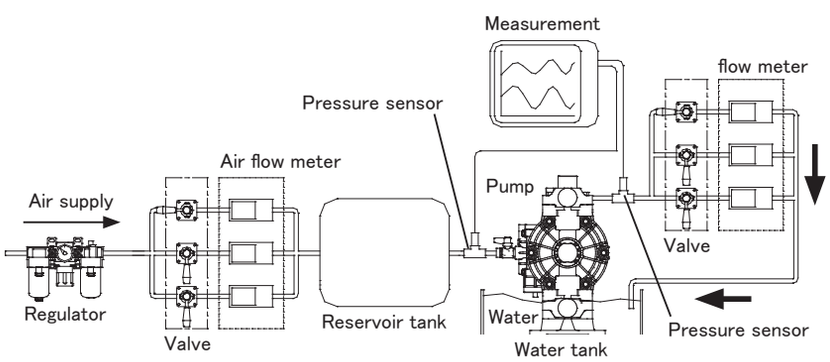

Measurement equipment and piping layout diagram

Installation

1.Installing and connecting the pump

・Decide where the pump should be installed and secure a suitable space (see Examples of installations A to D).

Examples of pump installations

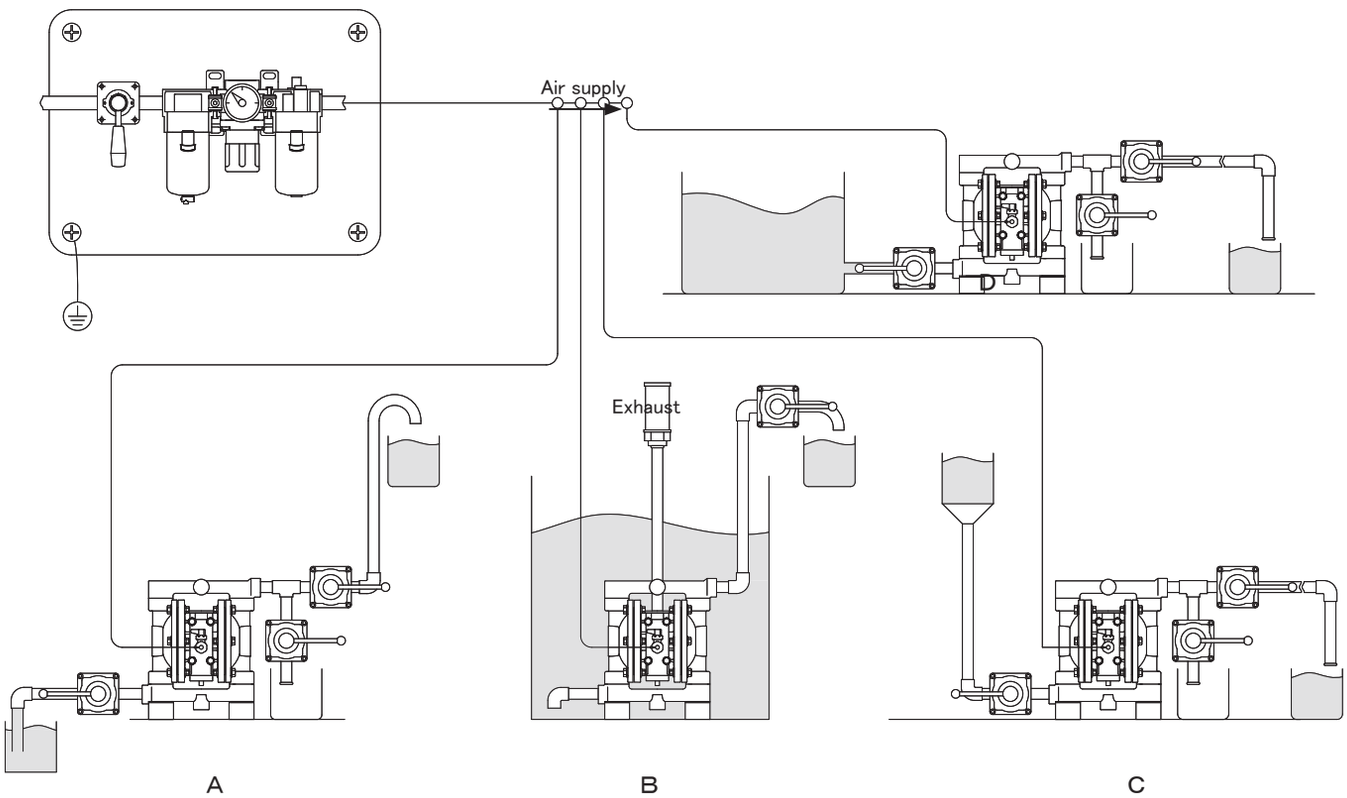

For optimal performance try to keep the suction lift as short as possible.

To protect the diaphragms from abnormal damage or breakage, the inlet pressure must be kept below the following values:

※ PTFE Diaphragms : 0.02 MPa [3 psi] (height 2 m [6.6 ft]) During operation

: 0.05 MPa [7 psi] (height 5 m [16.4ft]) When not in operation

※ PTFE・EPDM Diaphragms : 0.2MPa [29 psi] (height 20 m [65.6ft])

※ All other Diaphragms : 0.1MPa [14 psi] (height 10 m [32.8ft])

(The above values are when transferring fresh water under ambient temperature. Depending on the liquid these values may change.)

For 031 & 051 series, it is required to change the exhaust port part in case exhaust outside connecting a hose or pipe. Please consult with your distributor.

For 400 & 500 series with a plastic air motor, when exhausting air externally, remove the cap and silencer and connect a hose or piping to the internal female thread.

When installing the pump, please secure it using a method that allows for vibration absorption to avoid the bases contact the ground directly. Use the optional vibration proof rubber depending on vibration intensity.

Installation

⚠ CAUTION

- If the pump will be submerged into the liquid during operation, follow the steps below:
  - ＊ Verify the corrosion resistance of each component of the pump, and do NOT expose the pump to any fluid for which it does not have proper corrosion resistance.
  - ＊ The exhaust should be redirected outside, not into the fluid in which the pump is submerged. For information on how to arrange the exhaust, see [Arranging outside exhaust] below.

- When operating the pump, operational noise will be generated, and the level will depend upon the following conditions of use (type of fluid being pumped, the supply air pressure and liquid discharge pressure). If there are specific regulatory sound level rules that apply to your country or region, provide appropriate acoustic counter measures. (For the noise levels of this product, see [1. Specifications].)

- When airline operation is to be controlled by a solenoid valve, then a three way type valve is recommended. A three-way solenoid valve allows any trapped air to bleed off, in turn improving pump performance.

- Use a flexible hose that has grounding wires so that it can absorb the vibration of the pump. In particular, make sure that the pump is not subjected to external force at each connection due to the weight and vibration of the hose and piping.

- Use a hose that has larger diameter than the pump's connection size. It may cause performance degradation and also cause the pump to malfunction if using smaller diameter.

- When moving the pump, make sure that the pump will not fall. NEVER try to move the pump by pulling the hoses connected to the pump. Either the hose or the pump may be damaged.

- The tightening torque of bolts on this product may decrease over time. Make sure to retighten the bolts in accordance with the service book prior to operation.

- If you use the pump intermittently the pump will not require lubrication. However lubrication is recommended if running the pump continuously for long periods or using very dry air or at high temperatures. This will guarantee the life of the pumps seals.

  If you decide to use a lubricator, please use only turbine oil, Class 1(equivalent to ISO VG32).

NOTICE

- ＊ High temperature operation: When transferring liquids whose temperature exceeds 70℃ [158 ℉]
- ＊ Continuous operation: When the pump operates continuously for longer than 1 hour and is stopped for less than 15 minutes.
- ＊ Lubrication: Use only turbine oil Class 1(equivalent to ISO VG 32), under the following conditions;
  Oil concentration at 50mg/m^3, Absolute pressure at 0.1MPa [14psi]. Maximum temperature of 20℃ [68 ℉] and Humidity at 65%.
- ＊ Operation condition at 70℃ or above fluid temperature might cause an early degradation of performance and required to change the material of air motor seal parts.(except HT models and clamped pumps).

Installation

⚠ WARNING

- If a diaphragm is damaged, fluid may be ejected along with the air from the exhaust port. In cases when the pump is positioned below the liquid so that hydraulic pressure is acting on the pump, pushing the diaphragms etc, if a diaphragm fails then fluid can flow out of the pump under gravity. Please carryout protective measures, for example, place the pump in a pit, or set the pump into a protection box, use liquid detection through the use of a spill sensor, etc, and at the same time, provide visible warnings signs around the pump.
  - ＊ Pump exhaust should be directed to a safe place, away from people, animals and food if there is a risk that transferring liquids may affect the human body.
  - ＊ Connect a hose with an electrical ground wire to the pump's exhaust port, and attach the silencer to the end of the hose. Use a hose of the same diameter as the exhaust port. (If the hose is longer than 5 meters [16.4 feet] , consult your local distributor or our company directly.) Place the exhaust outlet in a pit, or a protection box, etc.

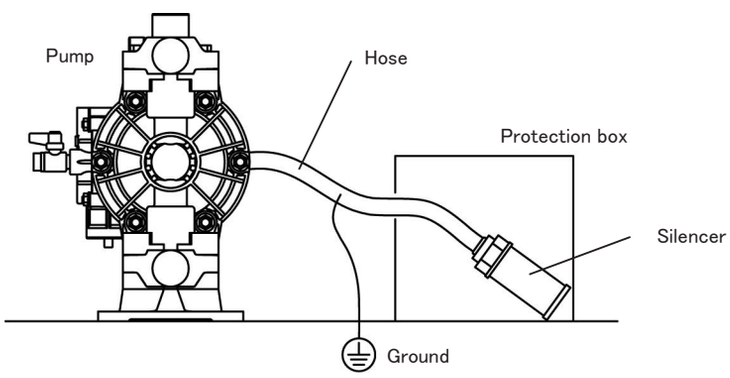

Arranging outside exhaust

2.Recommended Liquid piping connection diagram

1) Connect a flow valve and a drain valve to the liquid discharge side (outlet) of the pump.
2) Connect a flow valve for maintenance purposes to the suction side (inlet) of the pump.
3) Connect hoses to both the suction side and to the discharge side of the pump and attach them to the respective vessels.

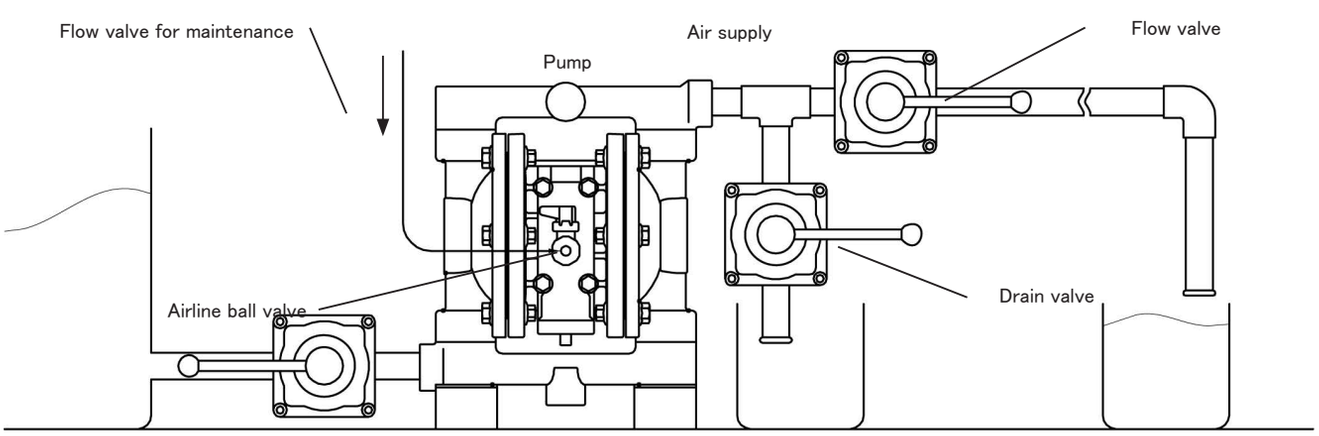

Installation

⚠ CAUTION

- When fitting liquid hoses to the pump, make sure to use a sturdy hose that will not collapse when strong suction pressure is applied from the pump. Also make sure the hose has a sufficient pressure rating to cope with the required discharge pressure.
- When pumping a fluid that contains slurry, verify that the particle size is below the Max solid size (see[1.Specifications]). If it exceeds the limitation of slurries indicated in the main specifications, attach a strainer to the pump to stop larger particles. Otherwise, such particles may cause a malfunction.
- If the pressure inside the piping is within the pump's allowable pressure range, no bypass or relief valve is needed. However, if there is a possibility that the internal pressure may exceed the pump's allowable pressure due to volume changes by thermal expansion or other factors depending on the installation environment, please install a bypass or relief valve to release the pressure.
- When testing piping for leakage, do NOT apply pressure to the pump's inlet and outlet sides with compressed air from outside. It may cause abnormal breakage to the diaphragm or the switching portion.
- When installing a standby pump or two pumps in parallel, be sure to provide a Flow valve on each of the IN and OUT liquid material manifolds and perform pump switchovers by firstly shutting off both pumps and separating them through the liquid material valves. If a Liquid line valve of the stopped pump remains open, the diaphragms could be inverted or stretched and possibly broken by the discharge pressure produced by the operating pump, thus resulting in damage in an early stage.

3.Recommended air piping connection diagram

- Connect an air valve, air filter, regulator and if necessary a lubricator (Make sure they are rated to provide sufficient air volume passage as required to run the pump correctly) Connect hoses to the pump and compressor.

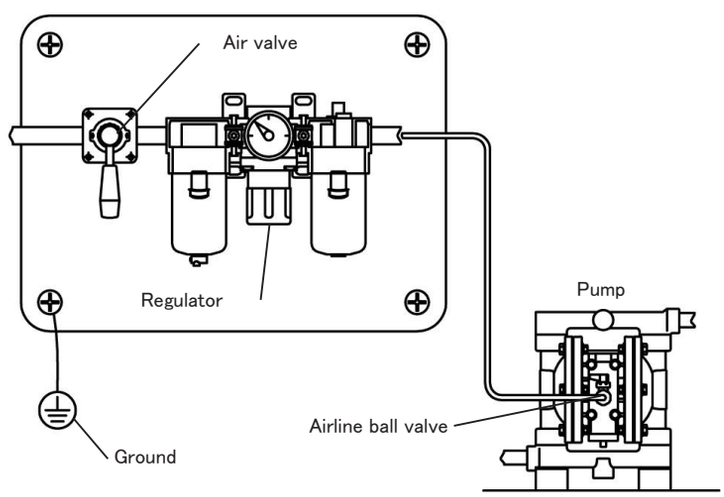

⚠ CAUTION

- The piping and the peripheral equipment may become clogged with foreign matter such as dust dirt or sludge. Clean the inside of the piping for 10 to 20 seconds before connecting it to the pump.

4.How to rotate the pump

・Pull the lever to release the brake. The lock pin is released and the pump can be rotated. Align the lever and push the lock pin into the hole where the position of the pump is to be fixed.

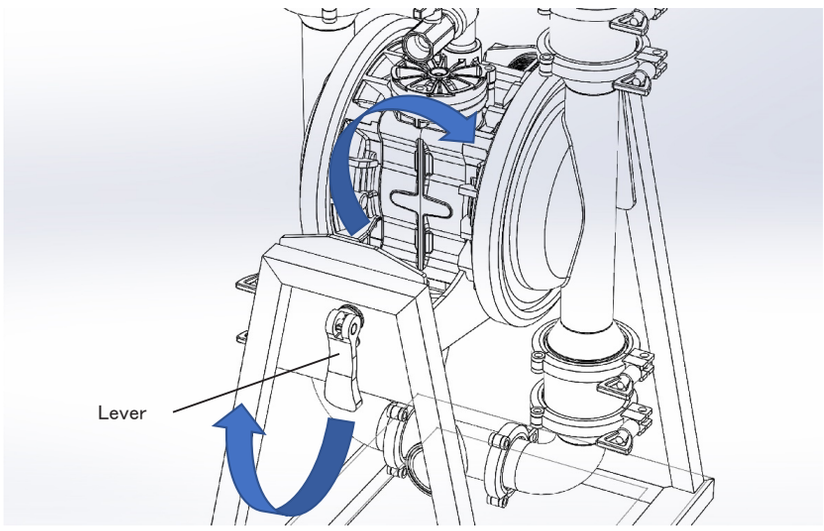

CAUTION

・The pump will be rotated when the brake is released. Be careful not to get your fingers caught.

・The pump can be securely locked in the upright position (normal operation position). To lock the pump at an arbitrary angle during maintenance, push the lever at the position where the lock pin is inserted into the oval hole to fix it.

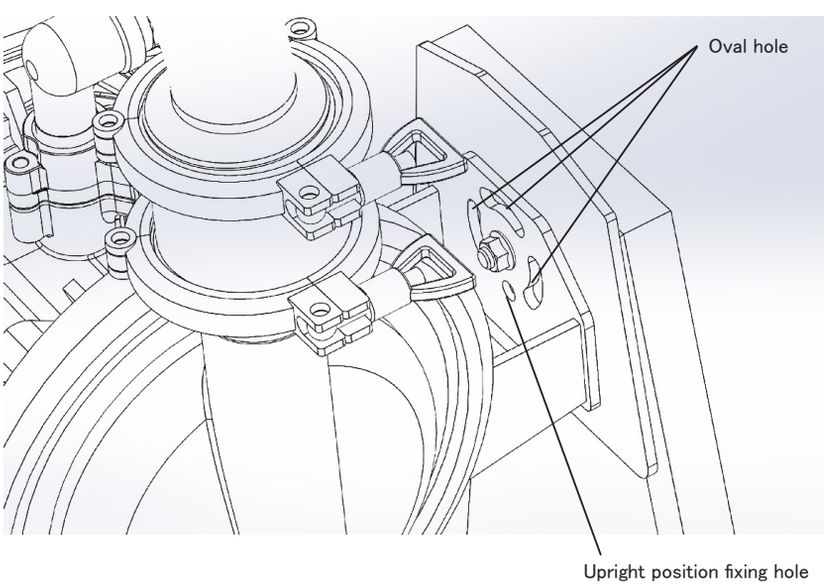

Operation

1.Pump start up

1) Open the air valve in front of each piece of peripheral equipment, and adjust the supply air pressure with a regulator to within the permissible range.
2) Open the flow valve on the discharge side.
3) Press the RESET BUTTON, and then slowly open the air valve of the pump.
4) Before allowing the pump to run at full pressure, first, verify that the pump is primed and fluid is flowing inside the piping and is being pumped to the discharge side, and then fully open the air valve.

⚠ WARNING

- If air pressure and discharge pressure exceed the allowable operating pressure, it may cause liquid leaks, damaged pump casings or diaphragms and could cause a fatal accident.

2.Liquid flow adjustments

- Adjust the flow valve on the discharge side. To see the relationship between the flow rate, supply air pressure and discharge pressure, see [Performance curves].

⚠ CAUTION

- As you start closing the liquid discharge flow valve, the supplied air pressure may rise. Make sure that the pressure is kept within the normal operating range.
- Depending upon the viscosity and specific gravity of the fluid, the suction stroke and other conditions, the permissible suction flow speed of fluid into the pump will vary; however, if the pump speed (flow speed of fluid) increases greatly, cavitation could occur, and this will not only reduce pump performance, but it may cause a malfunction. To prevent cavitation adjust the supply air pressure as well as the Discharge flow valve.
- If fluid is not discharged after you start the pump, or if you hear an abnormal noise or notice any irregularity, shut down the pump immediately (see [Troubleshooting]).
- The pump may stall if operated at less than 20 cycles per minute. Please press the reset button to operate it again.

3.Stopping the Pump

- Close the air valve of the pump and shut off the supplied air.

⚠ CAUTION

- It is permissible to shut down the pump by closing the liquid discharge flow valve even while air is still being supplied to the pump. However, if this condition continues for a long period without supervision, the pump may start running if there is a leak from the pump or piping, and therefore fluid may continue flowing out of the position of leakage.

Operation

⚠ CAUTION

- When the pump is shut down while pumping liquids containing slurry, particulate slurry matter contained in the liquid can settle and become deposited inside the bottom of the liquid chambers. If the pump is started again in the condition, the diaphragm may be damaged or the center disk may be overloaded, and this may cause damage such as bending or breaking of the center disk or center rod. As a counter measure, after finishing work, it is recommended to purge the remaining fluid and slurry particulate from the pump.

4.Releasing pressure

1) Make sure that the airline ball valve of the pump is closed.
2) Close the valve on the air-supply side of the peripheral equipment.
3) Close the flow valve on the discharge side, start opening the drain valve slowly, and discharge the pressurized fluid.
4) Open the airline ball valve of the pump, and run the pump until all the remaining pressurized air and liquid inside the pump is expelled.

⚠ CAUTION

- Fluid under pressure will gush out as soon as you open the valve, so take extreme care.

5.Method of cleaning the pump

⚠ WARNING

- Before starting operation, make sure that the pump is not pressurized.
- Be careful when removing any piping from the pump as any remaining fluid may gush out.

1) Remove the inlet hose from the suction side of the pump.
2) Close the flow valve on the discharge side, open the drain valve, and then operate a pump by opening the air pressure valve for a while to discharge any fluid remaining inside the pump.
3) Remove the outlet hose from the discharge side, and attach different hoses to the suction side and the discharge side for cleaning purposes.
4) Prepare a vessel with cleaning solution, select a cleaning solution which is appropriate for the type of fluid being pumped, and then connect the suction-side and the discharge-side hoses to the pump.
5) Operate the pump by starting the air pressure slowly, and let the cleaning solution circulate for a sufficient period to thoroughly clean the pump. (Finally, flush the pump with clean water.)
6) Remove the hose from the suction side of the pump, run the pump for a while and purge the pump of all remaining fluid.
7) After flushing with clean water, turn the pump upside-down to drain out any remaining water contained in the pump.

Operation

<Drainage>

・Pull the lever to release the brake. The lock pin is released and the pump can be rotated.

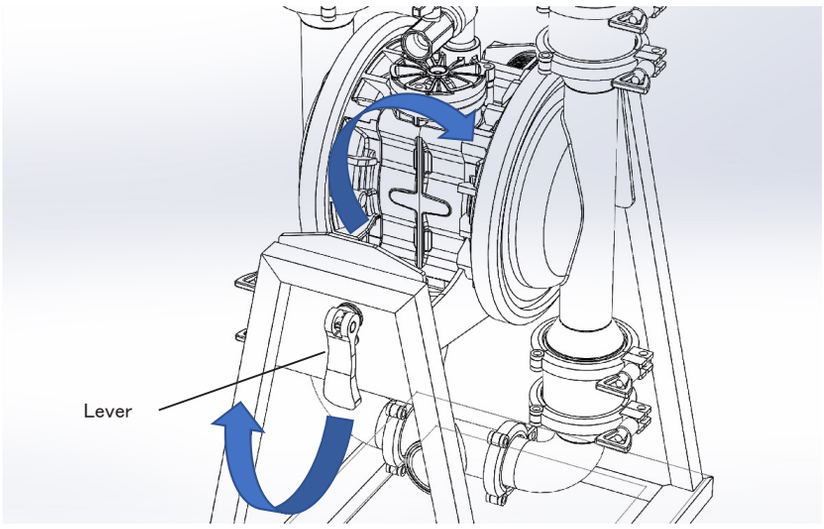

・The fluid is drained from the outlet when the pump is turned upside down.

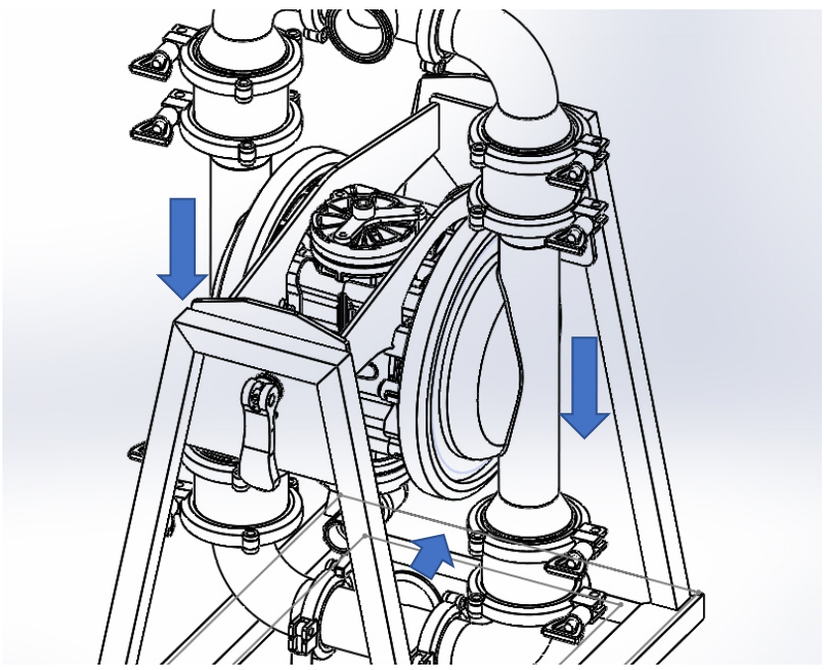

Maintenance

・Daily maintenance checks

A） Make sure the air filter drain is empty and working correctly.

B） When using a lubricator, verify that the quantity of lubricating oil is sufficient.

C） Make sure that there is no leakage of fluid from any hose connections or the pump body.

D） Check each bolt of the pump and retighten as necessary. Refer to the service book for details.

E） Make sure that there are no cracks in the pump casing or piping.

F） Make sure that the pipe connections are not loose.

G） Make sure that high ware parts have not past their life expectancy. Replace such parts at regular intervals. For details, refer to the Service Book.

Some special tools can help when disassembling and reassembling the pump. Please contact your local distributor or our company directly.

Maintenance

Troubleshooting

Problem	Probable Cause	Actions to be taken
Pump does not run	The exhaust port (silencer) of pump is clogged with Dirt or sludge.	Check and clean the exhaust port or replace the silencer.
	Air is not supplied	Start the compressor, open the airline ball valve and air Regulator. Check functionality of solenoid valves (if fitted).
	The supplied air pressure is too low	Raise the supplied air pressure to the pump. Check the compressor and regulator settings and check that the configuration of the air piping is correct.
	The supplied air volume is too low	Increase the supplied air volume to the pump. Check the compressor size, fittings & air piping inner diameter and air regulators are of sufficient size. Make sure air is not being syphoned off used to power other pumps or equipment.
	The spool stopped in neutral position	Press the RESET button.
	The Discharge line is closed or blocked	Open the discharge valve. Check functionality of solenoid valves (if fitted). Check for blockage caused by slurry etc. Check that the liquid line back pressure is not higher than the supplied air pressure.
	Air motor section is corroded or damaged	Check for liquid contamination, chemical attack or corrosion to the moving components inside the air motor section. Clean or replace as necessary.

Maintenance

Troubleshooting

Problem	Probable Cause	Actions to be taken
Pump runs, but fluid does not come out or flow decreased, or stop.	The suction lift or discharge head is too long	Confirm the piping configuration and shorten the length.
	Supply tank is empty or inlet valve is closed or piping is crimped	Change or refill tank, check that inlet valves are fully open.
	Air leak on (inlet) suction side	Check that inlet hose or hose fittings are not loose or broken and pump manifold torque values are correct. Check the Inlet Manifold O-rings are not damaged or missing.
	The suction-side fluid piping (including the strainer) is clogged with slurry or sludge	Check and clean the fluid piping and filters (if fitted).
	The supply air pressure is low	Raise the supplied air pressure to the pump. Check the compressor and regulator settings and check that the configuration of the air piping is correct.
	Cavitation occurs	Adjust the correlation between supply air pressure inlet and discharge flow or pressure, or shorten the suction lift length.
	Chattering occurs (ball valves not seating properly)	Check and adjust the correlation between supplied air pressure and inlet pressure and discharge pressure or flow. Decrease the inlet flow rate or increase the back pressure by slightly closing the discharge valve. Check the ball valve material is sufficiently heavy compared to the liquid being pumped.
	Icing on air-switching portion	Check that the air filter and exhaust are clean and not blocked or restricted. Check and adjust the air flow rate and the correlation between the liquid flow rates. Fit a speed control muffler. Manually remove ice from air-switching valve before restarting.
	The exhaust port (silencer) of pump is clogged with sludge. Or the air filter is blocked	Check and clean the exhaust port or replace the silencer. Check and replace the air filter as necessary.
	Air valve seals or sleeve or sleeve O-rings worn out or damaged	Inspect air valve and sleeve and replace components as necessary.

Maintenance

Troubleshooting

Problem	Probable Cause	Actions to be taken
Liquid leakage from exhaust port (silencer)	The diaphragm is damaged	Disassemble and check the pump and replace the diaphragm.
	Excessive airline moisture or oil lubrication	Check and repair the compressor. Fit or empty an airline moisture drainer. Reduce or remove the oil lubrication.
Air is mixed into the liquid	The diaphragm is perforated cut or torn	Disassemble and check the pump check and replace the diaphragms as necessary.
	The diaphragm is not seated correctly within the chambers or the O-ring is missing	Check the positioning of the diaphragm is correct, and check the diaphragm is not deformed due to under torque of the chamber bolts. Check the O-ring is not missing or damaged and replace as necessary. Re-Torque the chamber bolts t the correct value.
	Air leak on (inlet) suction side	Check that inlet hose or hose fittings are not loose or broken and the pump manifold torque values are correct. Check the Inlet manifold O-rings are not damaged or missing.
Irregular noise	The supply air pressure is too high	Lower the supply air pressure to the pump. (Check the compressor and the configuration of air piping.)
	The spool oscillates and ball chattering occurs	Adjust the supply air pressure and discharge pressure. Reduce inlet flow valve to adjusting liquid pressure and volume.
	The pump is clogged with sludge with particles of larger than the permissible diameter	Disassemble the casing, check and clean.
	Pilot valve(s) are faulty or damaged	Inspect and replace pilots, seals or bushings as necessary
	Exhaust (muffler) is missing or broken	Inspect replace or fit a new muffler.

Maintenance

Troubleshooting

Problem	Probable Cause	Actions to be taken
Irregular vibration	The supply air pressure is too high	Lower the supply air pressure to the pump. (Check the compressor and the configuration of air piping.)
	The spool oscillates, and Occur ball chattering	Adjust the supply air pressure and discharge pressure. Reduce inlet flow valve to adjusting liquid pressure and volume.
	Connection parts and pump mounting are loose	Check each connection part and tighten the bolts.
	Piping is loose or vibrating due to the pump action or from water hammer etc	Secure piping to a mounting and or fit flexible connections between pump and piping.
Bent Or Broken Centre Shaft	Pumping slurry with excessive solids content	Reduce solids content to specified values.
	Slurry settling when pump is not in use	Flush or clean slurry from pump before use. Or start pump very slowly until settled solids are dissipated.
Premature Diaphragm Failure	Chemical attack (misapplied diaphragm)	Make sure to match chemical to diaphragm material.
	Temperature damage (too hot/too cold)	Use a diaphragm material better suited to high/low temperature applications.
	Excessive suction (vacuum) pressure (liquid inlet side)	Keep suction pressure to within specified limits. Change to a thermoplastic elastomer diaphragm if possible.
	Excessive liquid inlet pressure	Keep inlet pressure to within specified limits. Change to a thermoplastic elastomer diaphragm if possible. Start & run pump slowly until it is primed fully.
	Over pressurization air side / excess airline pressure	Keep air pressure within allowable limits. Use a thermo plastic elastomer diaphragm if possible.
	Excessive dry running	Keep dry running to a minimum. Install a dry running detector. Change diaphragms to a thermoplastic elastomer if possible.

Limited Factory Warranty

YTS warrants to original use purchaser of diaphragm pumps manufactured by YTS that it will restore, replace, or substitute, free of charge, including all shipping charges for diaphragm pumps delivered hereunder against defects in material and workmanship for a period of five (5) years from the date of shipment (the "Warranty Period"), as determined solely by YTS inspection, provided the claimed defective product, or part thereof, is promptly returned to YTS with transportation prepaid. This warranty is valid provided the Purchaser has stored, installed, maintained, and operated such Equipment in accordance with good industry practices and product is operated under normal use and maintained in accordance with installation and operating instructions supplied by YTS. This warranty does not cover malfunction or failure of pumps, parts, or components due to; normal wear & tear, or wear which in the judgment of YTS arises from incorrect or faulty installation, misapplication, misuse, chemical reaction, corrosion, excessive heat or cold, abrasion, excessive pressures, operating beyond specified operating parameters or damage caused in transit or in storage, accidental damage or tampering, damage due to fire, earthquake, flood, natural environmental or other force majeure. Moreover this warranty does not cover failure of pumps, parts, or components due to modifications made to the pump, substitution of parts with Non-YTS parts, use of non-specified parts or accessories, faulty repairs or incorrect replacement of parts, malfunction arising from the use of compressed air that contains impurities or excessive moisture or dirt, or the use of gases other than compressed air or nitrogen, the excessive use of lubricants, or the use of lubricants other than those specified for this product. Unless during the warranty period all service is performed by YTS or its authorized distributor or representative, or if the serial-number, type plate or similar signs are removed or unrecognizable, the warranty responsibility of YTS shall immediately terminate. If such a defect appears in YTS Products within the Warranty Period, the Purchaser is obligated to promptly report any failure to conform to this warranty. Purchaser shall check the goods immediately upon receipt with due and reasonable care. Notification of recognizable defects must be given in writing in any event not later than two (2) weeks after receipt of goods. The Purchaser shall notify YTS in writing of non-evident defects within two (2) weeks after identification.

YTS may request specific data relating to the Product or system thereof and may also require the return of the defective part, transportation prepaid, to YTS or an authorized service location as YTS designates, to establish the claim. Whereupon the Company shall, at its option, correct such nonconformity, by suitable repair to such Equipment or, furnish a replacement part at YTS' s option, by shipping a similar part YTS' s shipping point, or at its option refund an equitable portion of the purchase price. If YTS' s inspection discloses no defect in material, design, or workmanship, repair, replacement or substitution and return will be made at customary charges. All costs of removal, reinstallation, field labor and transportation shall be borne by the Purchaser. No allowance will be made for repairs without YTS' s written consent or approval, and the Warranty Period shall not be suspended upon stopping operation for warranty repairs, nor recommence upon completion of the warranty repairs, but shall run continuously from commencement until normal expiration. Repair parts shall carry no greater warranty than the remaining balance of the underlying YTS Product into which they may be installed, expiring at the same time as said underlying warranty. This is YTS' s sole and exclusive warranty. It applies only to YTS Products and specifically excludes Other Equipment. Accessories or equipment furnished by the Company, but manufactured by others, shall carry whatever warranty those manufacturers have conveyed to the Company and which can be passed on to the Purchaser. Whether or not such Other Equipment is included in YTS' s scope of supply hereunder. Such other Equipment is warranted only by its manufacturer. This warranty shall not apply to any component which Purchaser directs Company to use in or add to the Equipment, and which would not otherwise be used or added by the Company. Any descriptions of the YTS Products or Other Equipment, any specifications, and any samples, models, bulletins, or similar material used in connection with this sale are for the sole purpose of identifying the said Equipment and are not to be construed as express or implied warranties.

YTS MAKES NO OTHER WARRANTY OF ANY KIND WHATSOEVER, EXPRESS, OR IMPLIED; AND ALL WARRANTIES OF MERCHANTABILITY AND FITNESS FOR A PARTICULAR PURPOSE ARE HEREBY DISCLAIMED BY YTS AND EXCLUDED FROM THESE CONDITIONS. The Purchaser' s sole and exclusive remedy, whether upon warranty, contract or tort, including negligence, will be to proceed under this warranty. All liability of YTS shall terminate no later than the expiration of the Warranty Period. YTS is not responsible for any kind of damages caused by the pump, irrespective of the nature of the damages (direct or indirect) and its causes.

memo

EU Declaration of Conformity

YTS JAPAN Co., Ltd. declares that Air Operated Double Diaphragm Pumps and Automatic Air Operated Pulsation Dampeners listed below except pumps with electric devices comply with the requirements of directive and all applicable standards.

Applicable EU Directive: 2014/34/EU Equipment and Protective Systems intended for use in potentially Explosive Atmospheres

Applicable Standards: EN80079-36 Non-electrical equipment for explosive atmospheres - Basic method and requirements

EN80079-37 Non-electrical equipment for explosive atmospheres - Non-electrical type of protection constructional safety ''c'', control of ignition sources ''b'', liquid immersion ''k''

Products: YTS ''D'' Series Air Operated Double Diaphragm Pumps

Pump Series Model	/	Applicable Materials of Construction
D030Model	/	PVDF
D031Model	/	PVDF
D050Model	/	AL, SUS, PVDF, POM, CFPP, CFPTFE
D051Model	/	AL, SUS, PVDF, POM, CFPP, CFPTFE
D101Model	/	AL, SUS, CFPP
D150Model	/	POM
D151Model	/	AL, SUS, PVDF, POM
D152Model[A)]	/	AL, SUS, PVDF, POM, CFPP, CFPTFE
D200Model[B)]	/	AL, SUS, PVDF
D250Model[B)]	/	AL, SUS, FE, PVDF, CFPP, CFPTFE
D400Model[B)]	/	AL, SUS, FE, PVDF, CFPP
D500Model[B),C)]	/	AL, SUS, FE, PVDF, CFPP
D800Model[C)]	/	AL, SUS, FE

A) With CFPP Air Motor
B) With CFPP or Metallic Air Motor
C) With C, N, E, V, W Diaphragms or PTFE Diaphragm Fitted with Conductive TPEE back up or Conductive EPDM back up

Products: YTS ''P'' Models Automatic Air Operated Pulsation Dampeners

Dampeners Series Model	/	Applicable Materials of Construction
P10Model	/	AL, SUS, CFPP
P15Model	/	AL, SUS, PVDF, POM, CFPP, CFPTFE
P25Model	/	AL, SUS, FE, PVDF, CFPP, CFPTFE
P40Model	/	AL, SUS, FE, PVDF, CFPP
P50Model[D)]	/	AL, SUS, FE, PVDF, CFPP

D) With C, N, E, V, W Diaphragms or PTFE Diaphragm Fitted with Conductive TPEE back up or Conductive EPDM back up

Hazardous Location Applied:

Ⓔx II2G ExhIIBT5Gb「0℃≤Ta≤70℃」 Equipment group II, (subgroup IIB), temperature class T5, EPL Gb

Ⓔx II2D ExhIIIBT100℃Db「0℃≤Ta≤70℃」 Equipment group III, (subgroup IIIB), temperature class 100℃, EPL Db

Technical file has been stored at ExNB 0035 (TÜV Rheinland Industrie Service GmbH) with reference number 557Ex-Ab3825/23 according to rule 2014/34/EU.

Products Manufactured By:
YTS JAPAN Co., Ltd.
598-10 Monoi, Yotsukaido-City, Chiba, Japan,284-0012
Phone: +81(0)433106606 / Fax: +81(0)434248977
E-Mail: sales@yts-pump.com / Web: https://www.y-t-s.co.jp/

Official Importer / Distributor within the EU:
YTS Pump Engineering BV.
Logistiekweg 26, 7007 CJ Doetinchem, the Netherlands
Phone: +31(0)857607060
E-mail: info@yts-pumps.com / Web: https://www.yts-pump.com/

DATE/APPROVAL/TITLE
December 10th 2025

Shigeru Murata
Director of Quality Assurance
YTS JAPAN Co., Ltd.

EU Declaration of Conformity

Declaration of Conformity / Déclaration de Conformité / Declaración de Conformidad / Erklärung Bezüglich / Einhaltung Der Vorschriften / Dichiarazione di Conformità / Conformiteitsverklaring

YTS JAPAN Co., Ltd. declares that Air Operated Double Diaphragm Pumps (''D'' Series) and Automatic Air Operated Pulsation Dampeners (''P'' Series) and Pump Accessories (listed: KGD30-09) comply with the requirements of directive and all applicable standards.

Applicable EU Directive:	2006/42/EC	machinery directive
Applicable Standards:	EN809	Pumps and pump units for liquids – Common safety requirements

Products Manufactured By: YTS JAPAN Co., Ltd.
598-10 Monoi, Yotsukaido-City, Chiba, Japan,284-0012
Phone: +81 (0)433106606 / Fax: +81 (0)434248977
E-Mail: sales@yts-pump.com / Web: https://www.y-t-s.co.jp/

Official Importer / Distributor within the EU: YTS Pump Engineering BV.
Logistiekweg 26, 7007 CJ Doetinchem, the Netherlands
Phone: +31 (0)857607060
E-mail: info@yts-pumps.com / Web: https://www.yts-pump.com/

CE

DATE/APPROVAL/TITLE
December 18th 2024

Manufacturer:

Shigeru Murata
Director of Quality Assurance
YTS JAPAN Co., Ltd.

CE Authorized Representative:

Gerard Heikens
Managing Director
YTS Pump Engineering BV.