DAMPER OPERATION MANUAL

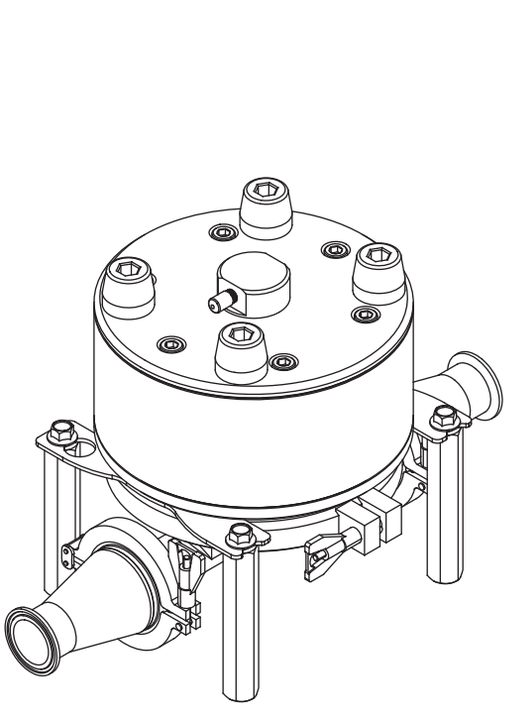

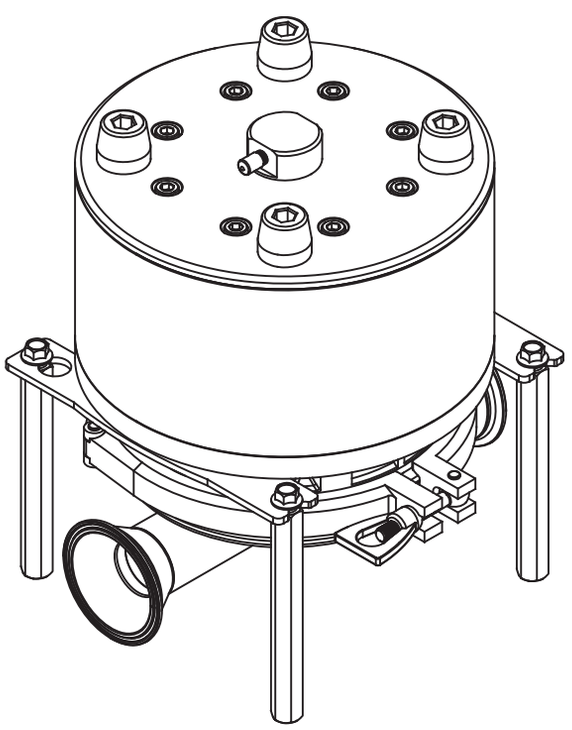

For safety purposes please be sure to read and follow the instructions contained within this manual before pump installation and operation.

P25SWFR P50SWFR

Introduction

Thank you for Purchasing our company Damper.

This product plays an important role as an accessory of our diaphragm pump. When it is installed in the discharge line it can decreases pulsation caused by the action of the pumps then transfer fluid stably. It can be used for a wide range of application as preventing vibration of piping, protecting the filter, liquid pump for metering unit, metering gauge pump combined with flow meters.

Table of contents

Introduction 1
Important Items 2
For safe operation 2

For safety ..... 3 ～ 5

Product information ..... 6 ～ 8
1.Specifications 6
2.Accessories included with the damper 6
3.Names of parts and materials 7
4.Dimensions 8
5.Liquid Temperature Correlation Graph 8

Installation ..... 9 ～ 12
1.Installing and connecting the damper 9
2.Recommended liquid piping connection diagram 10
3.Recommended air piping connection diagram 11

Operation ..... 12 ～ 13
1.Method of staring the damper 12
2.Method of stopping the damper 12
3.Method of cleaning the damper 13

Maintenance ..... 14 ～ 15
Daily Maintenance checks 14
Troubleshooting 14

Limited Factory Warranty 15

While damper is in operation do not cover the liquid inlet port with your hand or any another part of your body.

If the damper has remained unused for a long period or if you have any kind of misgivings about running the damper please consult with your local our company distributor or contact our company directly.

Important Items

For safe operation

● Before using the pump, be sure to read this document carefully, particularly the ″warnings and cautions,″ and be fully familiar with the correct operating procedures.

● Within this document all the warnings and cautions will be indicated by the following symbols.



WARNING If you ignore the warning described and operate the product in an improper manner, there is danger of serious bodily injury or death.



CAUTION If you ignore the caution described and operate the product in an improper manner, there is danger of personal injury or property damage.

Furthermore, to indicate the type of danger and damage, the following symbols are also used along with those mentioned above:



This symbol indicates a DON'T, and will be accompanied by an explanation on something you must not do.



This symbol indicates a DO, and will be accompanied by instructions on something you must do in a certain situation.



This symbol indicates important information is contained here.

For safety

⚠ WARNING

・When using compressed gas (hereinafter referred to as "compressed air") to drive this damper, be sure it is one of the following:

1)Compressed air supplied from an air compressor

(To drive this product, use supply air with a minimum moisture content.)

2)Nitrogen (N2) gas

The use of compressed air other than those mentioned above may cause air pollution, damage to the damper, or even an explosion.

・Pressure Ratings are dependent on damper material and liquid temperature variations.

Please see the "Liquid Temperature Correlation Graph" in the [5. Performance curves] and check for the allowable operating pressure at the specific temperature of the liquid being pumped. Air pressure and discharge pressure must not exceed the allowable operating pressure. If air pressure and discharge pressure exceed the allowable operating pressure, it may cause liquid leaks, damage to the damper casings or diaphragms and could cause a fatal accident.

・Before moving this product, make sure that the internal pressure is released. If the damper is moved while under pressure, any shock imparted by knocking or dropping the damper etc. may damage the damper or even cause an explosion.

・Improper electrical grounding, poor ventilation, or unshielded fire or spark can create a danger of fire or explosion.

Therefore, the following precautions are strongly advised.

* All peripheral equipment and piping connected to this product should be properly grounded.
* To damper flammable liquids, use a model with a conductive aluminum or stainless-steel casing.
* Whenever you notice any spark while operating this product, immediately stop its operation, and do NOT start using it again unless you are sure of the cause and corrective actions have been taken out.
* Depending upon the type of fluid being pumped, bubbles of flammable gas may be generated. Make sure that ventilation is satisfactory.
* This product itself, its piping and exhaust ports should be kept away from unshielded fire, spark and other causes of ignition. If a diaphragm is damaged, fluid may gush out together with air from the exhaust port.
* Do NOT leave gasoline or solvent etc. that contains waste at the work site.
* Machinery and other equipment near the place of installation of this product should be properly insulated to prevent electrical conduction with each other.
* Do NOT operate heating devices naked flames or have heating filaments anywhere near the damper or its piping.
* If there are flammable gases in the immediate atmosphere while the damper is operating, do NOT switch electric appliance on and off.
* Do NOT operate gasoline engines around the damper work site.
* Restrict smoking around the damper work site.

For safety

⚠ WARNING

- Before using this product, be sure you are familiar with the precautions regarding the fluid to be pumped, and verify the corrosion resistance of the parts that will come into contact with the fluid (wetted parts). NEVER use the product with any fluid against which it does not have sufficient corrosion resistance or with a fluid that poses a risk of explosion. If you are unsure of the corrosion resistance, contact your nearest distributor or our company directly. If you use this product with any fluid against which the parts that will come in contact with the fluid do not have sufficient corrosion resistance, it may result in damaging the product or leakage of fluid or damper failure.

- When using this product, observe local relevant regulatory rules concerning transfer and storage of chemicals, fire prevention, labor safety standards, etc.

- Hazardous fluids (such as strong acid or alkali, flammable or toxic liquids) or gas bubbles generated by such fluids may cause serious injury or even death if accidentally inhaled or consumed or if they come into contact with the eyes or adhere to the skin. Therefore, the following precautions are strongly advised.
  *Be fully familiar with the properties of the fluid to be pumped and work in strict accordance with the operating instructions provided by the suppliers of such fluids (such as wearing goggles, gloves, mask or protective work clothes).
  *When storing a hazardous fluid, strictly comply with the regulatory procedures (such as using proper containers, storage conditions, etc.).
  *Install the piping and exhaust port of this pump away from areas frequented by human and animal traffic if there is a risk that transferring liquids may affect the human body.

- In case of transferring a high temperature fluid, casing and piping heated and may cause burns by touching.

- High purity PTFE series dampers are intended for pumping hazardous fluids such as those that contain strong acids or organic solvents. If you find any irregularity in this product, do NOT try to disassemble or service the product yourself. Contact your dealer or our regional office for service. If you disassemble or service this product yourself and if further irregularity occurs, it may cause a great risk, depending upon the kind of fluid to be pumped.

For safety

⚠ CAUTION

- If a diaphragm of this product is damaged, the supplied air may mix with the fluid or the fluid may flow into the main body (air-switching portion). If the air supply is inadequate or the damper is contaminated, do NOT operate the damper.

- After you shut down the damper and disconnect the piping, some fluid may still be remaining inside the damper. Also, if the damper is left unused for a prolonged period, some fluid may remain inside the damper and within the connected piping. Therefore, be sure to purge the system of fluid and clean the damper before prolonged disuse or storage. If the product is left unused for a prolonged period with fluid remaining in the connected piping as well as the damper itself, the fluid may expand, depending on the ambient temperature (because of freezing or heat), which may cause damage to the damper and/or piping and possible leakage of fluid.

- The Dampers Non wetted parts are made from various materials and are not designed to withstand corrosive chemicals. Therefore there is a possibility of damage to the dampers non wetted parts through leaks or breakage of the diaphragm as well as liquid or gas permeation through the actual diaphragm material. There is also a possibility of damage due to chemical fumes in the local environment or fumes entering into the air line through the compressor. It is also possible to damage these components when incorrect lubrication is used. To help prevent any unnecessary damage please follow the following precautions. Ventilation of the local environment, remove liquids when the pump is not in use. (Long term). Open ventilation of the switching area of pump. Clean and flush the pumps air switching section if a leak or diaphragm breakage occurs.

- For safe transport be sure to prevent liquid leaking from damper for safe transport.
  It is the end-users responsibility to thoroughly wash and clean the damper(s) to prevent accidents caused by liquid leaks.

- Always use genuine parts when replacing component parts of this product. Do not attempt to modify the components parts or replace them with anything other than genuine parts.

Product information

1.Specifications

Model	P25SWFR	P50SWFR
Liquid port	Equivalent to Ferrule 1.5S	Equivalent to Ferrule 3.0S
Material・Weight	Table 1	
Operating pressure	0 ～ 0.7 MPa [0-100 psi]	0 ～ 0.7 MPa [0-100 psi]
Max discharge pressure	0.7 MPa [100 psi]	0.7 MPa [100 psi]
Max air consumption	20 L/min(ANR) [0.71 SCFM]	20 L/min(ANR) [0.71 SCFM]
Max solid size	8 mm or less	12 mm or less
Ambient temperature	0 ～ 70 ℃ [32-158 ℉]	0 ～ 70 ℃ [32-158 ℉]
Liquid temperature	0 ～ 100 ℃ [32-212 ℉]	0 ～ 100 ℃ [32-212 ℉]
Dimensions	Table 2	

※ 1 The maximum discharge pressure of the pump depends on the liquid temperature. (Table 3)

2.Accessories included with the pump

☐ Pump Safety Manual.....1

⚠ CAUTION

- After delivery open the product packaging and check to make sure that all included accessories are present and in good order.
- Remember that the damper is heavy, so extreme care must be taken when lifting it. When lifting the damper using a chain hoist or crane, be sure to lift the damper by the specified lift point(s). Be careful that nobody will pass under the damper when you lift it. It will be very dangerous if the damper should fall.
- When installing the accessories, please use the pipe sealing tape as provided for each threaded position, Also take care that broken or shredded pipe sealing tape does not contaminate the liquid or Air inlets. Note that a contaminated airline may cause failure of the dampers air switching unit.

Product information

3.Names of parts and materials

Outside view

P25SWFR

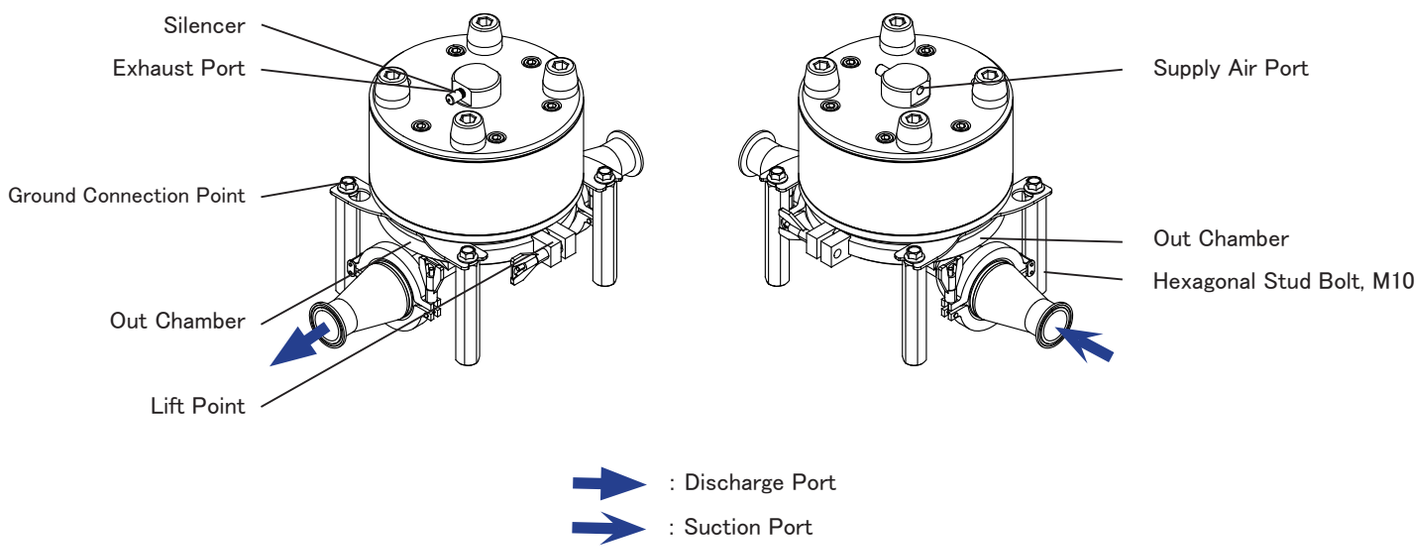

P50SWFR

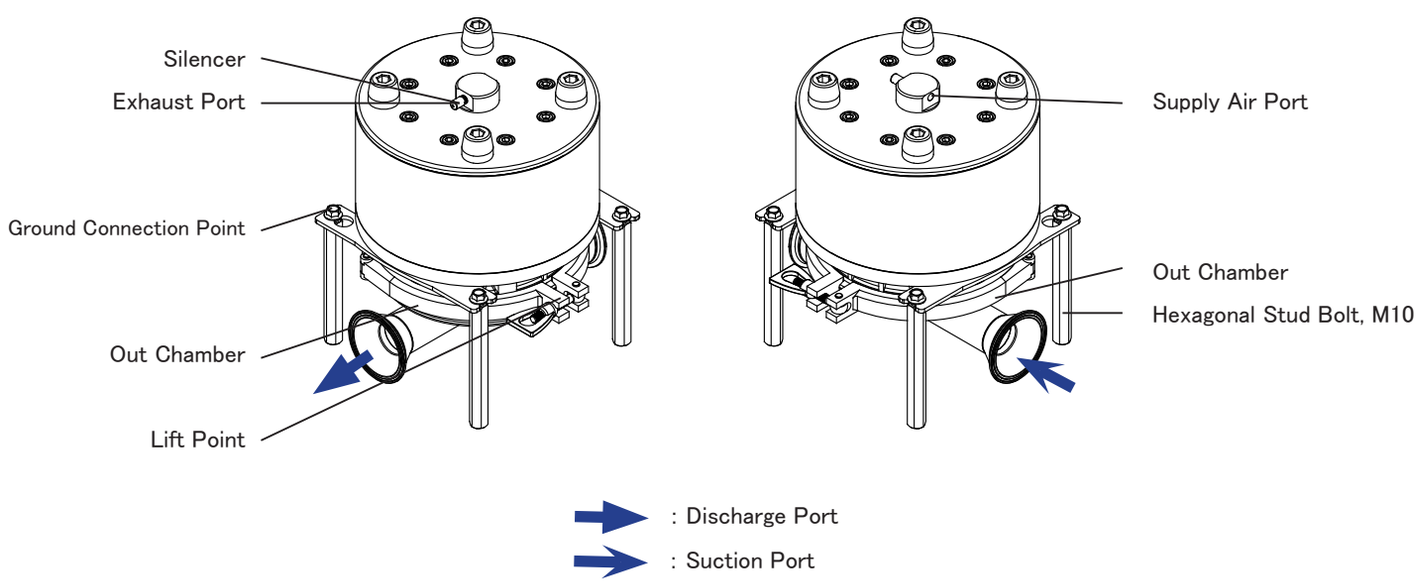

Material and weight

Model	25SWFR	50SWFR
Damper Wetted Parts	SCS14	SUS316L
Diaphragm	PTFE・EPDM	PTFE・EPDM
Weight	15.5 kg [34.2 lbs]	24.0 kg [52.9 lbs]

Table 1

Product information

4.Dimensions

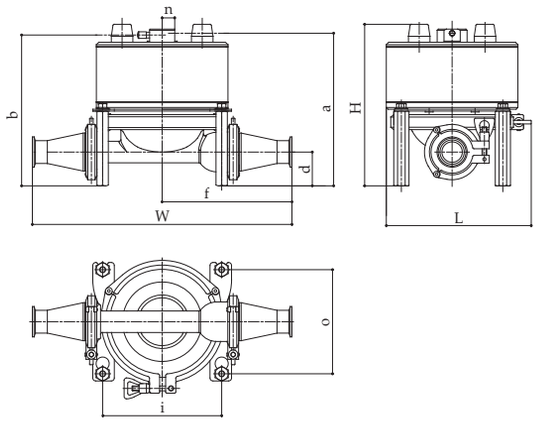

25WSWFR

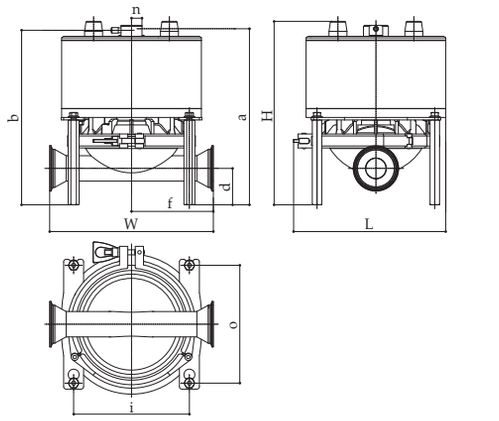

50SWFR

MODEL	H	W	L	a	b	d	f	i	n	o	AIR INLET/EXH	LIQUID IN/OUT
25SWFR	272 [10.71]	434 [17.09]	242 [9.53]	257 [10.12]	254 [10.00]	59 [2.24]	217 [8.54]	199 [7.83]	21 [0.83]	174 [6.85]	Rc1/8 [NPT1/8]	Equivalent to Ferrule 1.5S
50SWFR	368 [14.49]	328 [12.91]	305 [12.01]	353 [13.90]	350 [13.78]	73 [2.87]	164 [6.46]	232 [9.13]	21 [0.83]	236 [9.29]	Rc1/8 [NPT1/8]	Equivalent to Ferrule 3.0S

(Measure : mm [inch])

Table 2

5.Liquid Temperature Correlation Graph

NOTICE

- The maximum discharge pressure varies depending on the temperature.Be sure to refer to the specifications and check the liquid temperature correction graph.

Liquid Temperature Correlation Graph

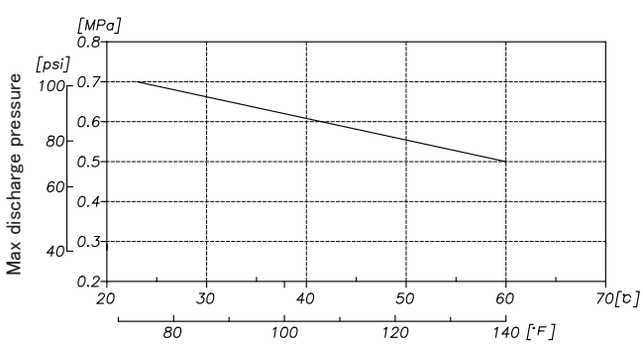

Liquid TEMP.

Table 3

Installation

1.Installing and connecting the pump

・Decide where the damper should be installed and secure a suitable space (see Examples of installations A to D).

Examples of pump installations

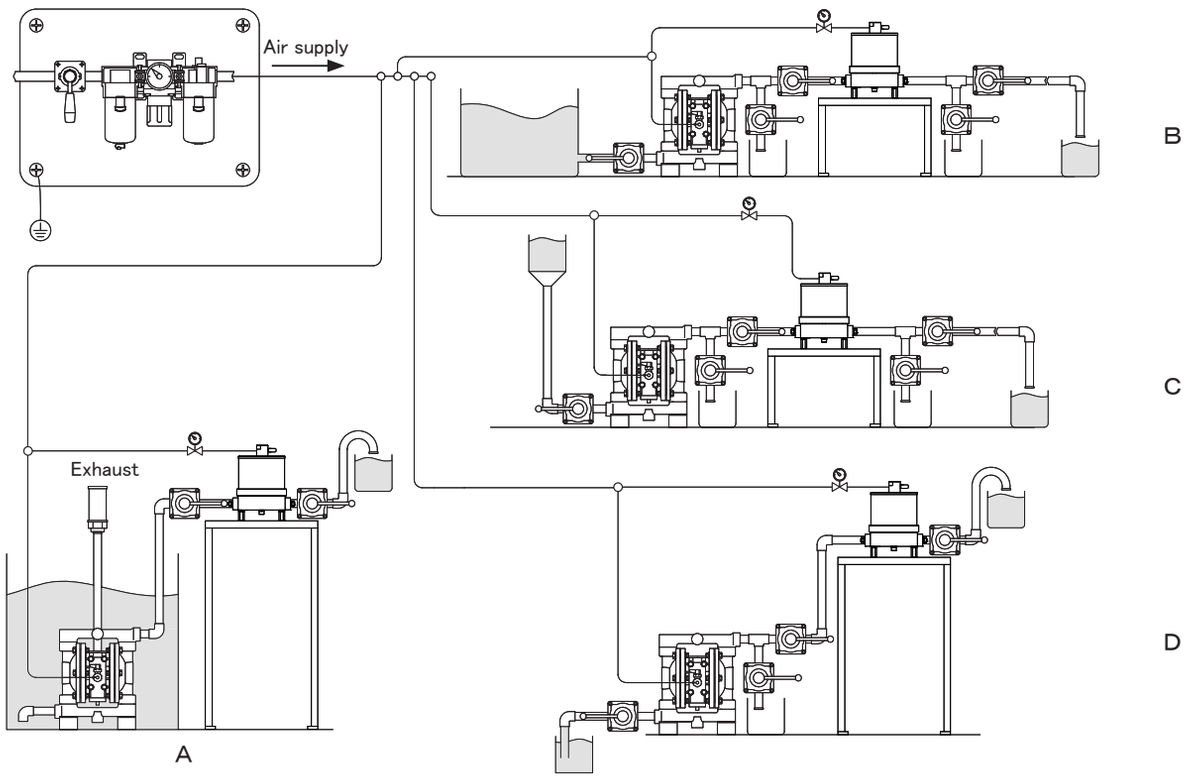

Please fix the dampener with anchor bolts in mounting holes.

CAUTION

・Use a flexible hose between the pump and hard piping to absorb pump or pipe vibration, and ground the hose.

・Make sure that there is no external mechanical force or pressure applied to any connections of the pump. Be especially careful not to allow the pump to support part of the weight of the hose or the piping. If you use a hose of small inner diameter, the pump's performance may be adversely affected, and it may even malfunction.

・When moving the pump, make sure that the pump will not fall. NEVER try to move the pump by pulling the hoses connected to the pump. Either the hose or the pump may be damaged.

・The tightening torque of bolts on this product may decrease over time. Make sure to retighten the bolts in accordance with the service book prior to operation.

Installation

⚠ WARNING

- If a diaphragm is damaged, fluid may be ejected along with the air from the exhaust port. In cases when the pump is positioned below the liquid so that hydraulic pressure is acting on the pump, pushing the diaphragms etc, if a diaphragm fails then fluid can flow out of the pump under gravity. Please carryout protective measures, for example, place the pump in a pit, or set the pump into a protection box, use liquid detection through the use of a spill sensor, etc, and at the same time, provide visible warnings signs around the pump.
  - ＊ Damper exhaust should be directed to a safe place, away from people, animals and food if there is a risk that transferring liquids may affect the human body.
  - ＊ Connect a hose with an electrical ground wire to the damper's exhaust port, and attach the silencer to the end of the hose. Use a hose of the same diameter as the exhaust port. (If the hose is longer than 5 meters [16.4 feet] , consult your local distributor or our company directly.) Place the exhaust outlet in a pit, or a protection box, etc.

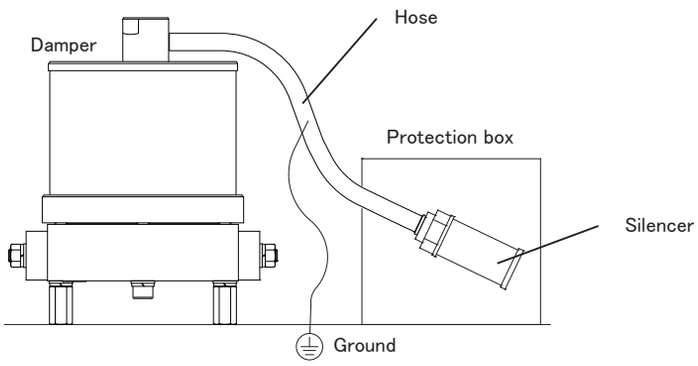

Arranging outside exhaust

2.Recommended Liquid piping connection diagram

1) Connect a flow valve and a drain valve to the liquid discharge side (outlet) of the damper.
2) Connect a flow valve for maintenance purposes to the suction side (inlet) of the damper.
3) Connect hoses to both the suction side and to the discharge side of the damper and attach them to the respective vessels.

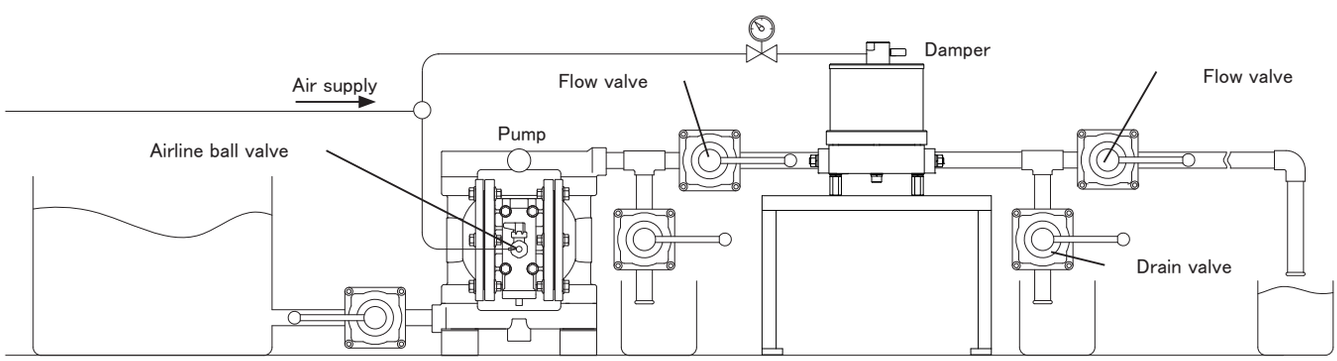

Installation

CAUTION

- When fitting liquid hoses to the pump, make sure to use a sturdy hose that will not collapse when strong suction pressure is applied from the pump. Also make sure the hose has a sufficient pressure rating to cope with the required discharge pressure.
- When pumping a fluid that contains slurry, verify that the particle size is below the Max solid size (see[1.Specifications]). If it exceeds the limitation of slurries indicated in the main specifications, attach a strainer to the pump to stop larger particles. Otherwise, such particles may cause a malfunction.
- When testing piping for leakage, do NOT apply pressure to the damper's inlet and outlet sides with compressed air from outside. It may cause abnormal breakage to the diaphragm or the switching portion.

3.Recommended air piping connection diagram

- Connect a hose to the supply port of the dampener after branching it with an air regulator from the air pipe connected to the pump.

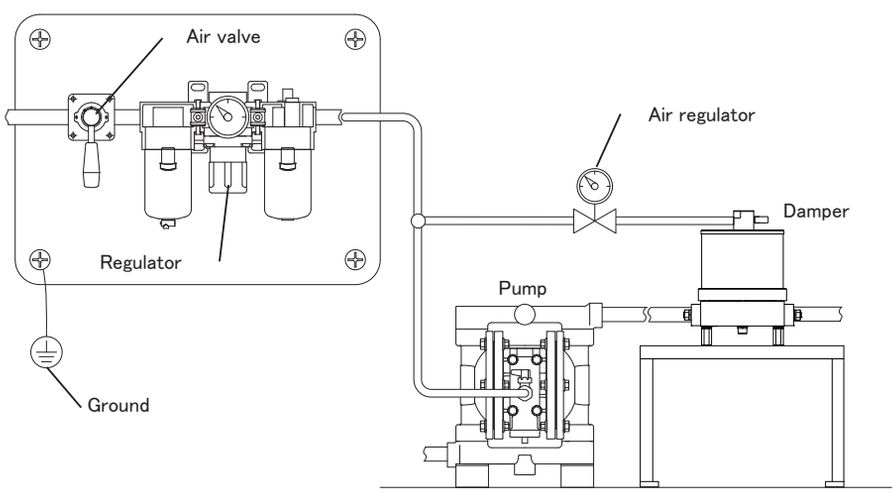

CAUTION

- The piping and the peripheral equipment may become clogged with foreign matter such as dust dirt or sludge. Clean the inside of the piping for 10 to 20 seconds before connecting it to the damper.

Operation

1.Method of staring the damper

1) Open the air valve in front of each piece of peripheral equipment, start the pump.

2) Set the supply air pressure to the reference level of "pump discharge pressure × 1.1" by using the regulator connected to the damper and make a fine adjustment in the range of ± 0.05MPa while checking the pulsation as required.

⚠ WARNING

- If air pressure and discharge pressure exceed the allowable operating pressure, it may cause liquid leaks, damaged pump casings or diaphragms and could cause a fatal accident.

⚠ CAUTION

- If fluid is not discharged after you start the pump, or if you hear an abnormal noise or notice any irregularity, shut down the pump immediately (see [Troubleshooting]).
- Unless the valve on the discharge side is somewhat throttled or piping resistance exists, the pulsation pressure with is not reduced.
- When the damper is installed at the use point at the end of the piping, it provides no effect.

2.Method of stopping the damper

- Stop the air supply to the damper first, and then stop the air supply to the pump after 30 seconds.

⚠ CAUTION

- It is permissible to shut down the pump by closing the liquid discharge flow valve even while air is still being supplied to the pump. However, if this condition continues for a long period without supervision, the pump may start running if there is a leak from the pump or piping, and therefore fluid may continue flowing out of the position of leakage.
- When the pump is shut down while pumping liquids containing slurry, particulate slurry matter contained in the liquid can settle and become deposited inside the bottom of the liquid chambers. If the pump is started again in the condition, the diaphragm may be damaged or the center disk may be overloaded, and this may cause damage such as bending or breaking of the center disk or center rod. As a counter measure, after finishing work, it is recommended to purge the remaining fluid and slurry particulate from the pump.

Operation

3.Method of cleaning the damper

⚠ WARNING

- Before starting operation, make sure that the pump is not pressurized.
- Be careful when removing any piping from the pump as any remaining fluid may gush out.

1) Remove the inlet hose from the suction side of the pump.
2) Close the flow valve on the discharge side, open the drain valve, and then operate a pump by opening the air pressure valve for a while to discharge any fluid remaining inside the pump and the damper .
3) Remove the outlet hose from the discharge side, and attach different hoses to the suction side and the discharge side for cleaning purposes.
4) Prepare the cleaning solution in the tank then insert the inlet hose from the suction side of the pump and the outlet hose from discharge side of the damper into the tank.
5) Operate the pump by starting the air pressure slowly, and let the cleaning solution circulate for a sufficient period to thoroughly clean the pump. (Finally, flush the pump with clean water.)
6) Remove the hose from the suction side of the pump, run the pump for a while and purge the pump and the damper of all remaining fluid.
7) After flushing with clean water, turn the pump upside-down to drain out any remaining water contained in the damper.

Maintenance

▪ Daily maintenance checks

A) Make sure the air filter drain is empty and working correctly.

B) Make sure that there is no leakage of fluid from any hose connections or the damper body.

C) Check each bolt of the pump and retighten as necessary. Refer to the service book for details.

D) Make sure that there are no cracks in the pump casing or piping.

E) Make sure that the pipe connections are not loose.

F) Make sure that high ware parts have not past their life expectancy. Replace such parts at regular intervals. For details, refer to the Service Book.

Some special tools can help when disassembling and reassembling the pump. Please contact your local distributor or our company directly.

Troubleshooting

Problem	Probable Cause	Actions to be taken
Pulsation occurs	The exhaust port (silencer) of damper is clogged with Dirt or sludge.	Check and clean the exhaust port or replace the silencer.
	The exhaust side of the valve seat is worn out, or there is a flaw	Inspect the valve seat for excess ware and replace as necessary.
Liquid leakage from exhaust port with the pulsation	The diaphragm is damaged	Disassemble and check the pump and replace the diaphragm
	The center disk fastening nuts are loose	Disassemble and check the pump. Tighten the nuts.
Air is mixed into the liquid	The diaphragm is damaged	Disassemble and check the pump and replace the diaphragm
	The center disk fastening nuts are loose	Disassemble and check the pump. Tighten the nuts.
	Air leak on (inlet) suction side	Check that inlet hose or hose fittings are not loose or broken and the pump manifold torque values are correct. Check the Inlet manifold O-rings are not damaged or missing.

Limited Factory Warranty

YTS warrants to original use purchaser of diaphragm pumps manufactured by YTS that it will restore, replace, or substitute, free of charge, including all shipping charges for diaphragm pumps delivered hereunder against defects in material and workmanship for a period of five (5) years from the date of shipment (the "Warranty Period"), as determined solely by YTS inspection, provided the claimed defective product, or part thereof, is promptly returned to YTS with transportation prepaid. This warranty is valid provided the Purchaser has stored, installed, maintained, and operated such Equipment in accordance with good industry practices and product is operated under normal use and maintained in accordance with installation and operating instructions supplied by YTS. This warranty does not cover malfunction or failure of pumps, parts, or components due to; normal wear & tear, or wear which in the judgment of YTS arises from incorrect or faulty installation, misapplication, misuse, chemical reaction, corrosion, excessive heat or cold, abrasion, excessive pressures, operating beyond specified operating parameters or damage caused in transit or in storage, accidental damage or tampering, damage due to fire, earthquake, flood, natural environmental or other force majeure. Moreover this warranty does not cover failure of pumps, parts, or components due to modifications made to the pump, substitution of parts with Non-YTS parts, use of non-specified parts or accessories, faulty repairs or incorrect replacement of parts, malfunction arising from the use of compressed air that contains impurities or excessive moisture or dirt, or the use of gases other than compressed air or nitrogen, the excessive use of lubricants, or the use of lubricants other than those specified for this product. Unless during the warranty period all service is performed by YTS or its authorized distributor or representative, or if the serial-number, type plate or similar signs are removed or unrecognizable, the warranty responsibility of YTS shall immediately terminate. If such a defect appears in YTS Products within the Warranty Period, the Purchaser is obligated to promptly report any failure to conform to this warranty. Purchaser shall check the goods immediately upon receipt with due and reasonable care. Notification of recognizable defects must be given in writing in any event not later than two (2) weeks after receipt of goods. The Purchaser shall notify YTS in writing of non-evident defects within two (2) weeks after identification.

YTS may request specific data relating to the Product or system thereof and may also require the return of the defective part, transportation prepaid, to YTS or an authorized service location as YTS designates, to establish the claim. Whereupon the Company shall, at its option, correct such nonconformity, by suitable repair to such Equipment or, furnish a replacement part at YTS' s option, by shipping a similar part YTS' s shipping point, or at its option refund an equitable portion of the purchase price. If YTS' s inspection discloses no defect in material, design, or workmanship, repair, replacement or substitution and return will be made at customary charges. All costs of removal, reinstallation, field labor and transportation shall be borne by the Purchaser. No allowance will be made for repairs without YTS' s written consent or approval, and the Warranty Period shall not be suspended upon stopping operation for warranty repairs, nor recommence upon completion of the warranty repairs, but shall run continuously from commencement until normal expiration. Repair parts shall carry no greater warranty than the remaining balance of the underlying YTS Product into which they may be installed, expiring at the same time as said underlying warranty. This is YTS' s sole and exclusive warranty. It applies only to YTS Products and specifically excludes Other Equipment. Accessories or equipment furnished by the Company, but manufactured by others, shall carry whatever warranty those manufacturers have conveyed to the Company and which can be passed on to the Purchaser. Whether or not such Other Equipment is included in YTS' s scope of supply hereunder. Such other Equipment is warranted only by its manufacturer. This warranty shall not apply to any component which Purchaser directs Company to use in or add to the Equipment, and which would not otherwise be used or added by the Company. Any descriptions of the YTS Products or Other Equipment, any specifications, and any samples, models, bulletins, or similar material used in connection with this sale are for the sole purpose of identifying the said Equipment and are not to be construed as express or implied warranties.

YTS MAKES NO OTHER WARRANTY OF ANY KIND WHATSOEVER, EXPRESS, OR IMPLIED; AND ALL WARRANTIES OF MERCHANTABILITY AND FITNESS FOR A PARTICULAR PURPOSE ARE HEREBY DISCLAIMED BY YTS AND EXCLUDED FROM THESE CONDITIONS. The Purchaser' s sole and exclusive remedy, whether upon warranty, contract or tort, including negligence, will be to proceed under this warranty. All liability of YTS shall terminate no later than the expiration of the Warranty Period. YTS is not responsible for any kind of damages caused by the pump, irrespective of the nature of the damages (direct or indirect) and its causes.

memo

EU Declaration of Conformity

YTS JAPAN Co., Ltd. declares that Air Operated Double Diaphragm Pumps and Automatic Air Operated Pulsation Dampeners listed below except pumps with electric devices comply with the requirements of directive and all applicable standards.

Applicable EU Directive: 2014/34/EU Equipment and Protective Systems intended for use in potentially Explosive Atmospheres

Applicable Standards: EN80079-36 Non-electrical equipment for explosive atmospheres - Basic method and requirements

EN80079-37 Non-electrical equipment for explosive atmospheres - Non-electrical type of protection constructional safety "c", control of ignition sources "b", liquid immersion "k"

Products: YTS "D" Series Air Operated Double Diaphragm Pumps

Pump Series Model	/	Applicable Materials of Construction
D030Model	/	PVDF
D031Model	/	PVDF
D050Model	/	AL, SUS, PVDF, POM, CFPP, CFPTFE
D051Model	/	AL, SUS, PVDF, POM, CFPP, CFPTFE
D101Model	/	AL, SUS, CFPP
D150Model	/	POM
D151Model	/	AL, SUS, PVDF, POM
D152Model[A)]	/	AL, SUS, PVDF, POM, CFPP, CFPTFE
D200Model[B)]	/	AL, SUS, PVDF
D250Model[B)]	/	AL, SUS, FE, PVDF, CFPP, CFPTFE
D400Model[B)]	/	AL, SUS, FE, PVDF, CFPP
D500Model[B),C)]	/	AL, SUS, FE, PVDF, CFPP
D800Model[C)]	/	AL, SUS, FE

A) With CFPP Air Motor
B) With CFPP or Metallic Air Motor
C) With C, N, E, V, W Diaphragms or PTFE Diaphragm Fitted with Conductive TPEE back up or Conductive EPDM back up

Products: YTS "P" Models Automatic Air Operated Pulsation Dampeners

Dampeners Series Model	/	Applicable Materials of Construction
P10Model	/	AL, SUS, CFPP
P15Model	/	AL, SUS, PVDF, POM, CFPP, CFPTFE
P25Model	/	AL, SUS, FE, PVDF, CFPP, CFPTFE
P40Model	/	AL, SUS, FE, PVDF, CFPP
P50Model[D)]	/	AL, SUS, FE, PVDF, CFPP

D) With C, N, E, V, W Diaphragms or PTFE Diaphragm Fitted with Conductive TPEE back up or Conductive EPDM back up

Hazardous Location Applied:

Ⓔx II2G ExhIIBT5Gb「0℃≤Ta≤70℃」 Equipment group II, (subgroup IIB), temperature class T5, EPL Gb

Ⓔx II2D ExhIIIBT100℃Db「0℃≤Ta≤70℃」 Equipment group III, (subgroup IIIB), temperature class 100℃, EPL Db

Technical file has been stored at ExNB 0035 (TÜV Rheinland Industrie Service GmbH) with reference number 557Ex-Ab3825/23 according to rule 2014/34/EU.

Products Manufactured By:

YTS JAPAN Co., Ltd.
598-10 Monoi, Yotsukaido-City, Chiba, Japan,284-0012
Phone: +81(0)433106606 / Fax: +81(0)434248977
E-Mail: sales@yts-pump.com / Web: https://www.y-t-s.co.jp/

Official Importer / Distributor within the EU:

YTS Pump Engineering BV.
Logistiekweg 26, 7007 CJ Doetinchem, the Netherlands
Phone: +31(0)857607060
E-mail: info@yts-pumps.com / Web: https://www.yts-pump.com/

DATE/APPROVAL/TITLE
December 10th 2025

Shigeru Murata
Director of Quality Assurance
YTS JAPAN Co., Ltd.

EU Declaration of Conformity

Declaration of Conformity / Déclaration de Conformité / Declaración de Conformidad / Erklärung Bezüglich / Einhaltung Der Vorschriften / Dichiarazione di Conformità / Conformiteitsverklaring

YTS JAPAN Co., Ltd. declares that Air Operated Double Diaphragm Pumps (''D'' Series) and Automatic Air Operated Pulsation Dampeners (''P'' Series) and Pump Accessories (listed: KGD30-09) comply with the requirements of directive and all applicable standards.

Applicable EU Directive:	2006/42/EC	machinery directive
Applicable Standards:	EN809	Pumps and pump units for liquids – Common safety requirements

Products Manufactured By: YTS JAPAN Co., Ltd.
598-10 Monoi, Yotsukaido-City, Chiba, Japan,284-0012
Phone: +81 (0)433106606 / Fax: +81 (0)434248977
E-Mail: sales@yts-pump.com / Web: https://www.y-t-s.co.jp/

Official Importer / Distributor within the EU: YTS Pump Engineering BV.
Logistiekweg 26, 7007 CJ Doetinchem, the Netherlands
Phone: +31 (0)857607060
E-mail: info@yts-pumps.com / Web: https://www.yts-pump.com/

CE

DATE/APPROVAL/TITLE
December 18th 2024

Manufacturer:

Shigeru Murata
Director of Quality Assurance
YTS JAPAN Co., Ltd.

CE Authorized Representative:

Gerard Heikens
Managing Director
YTS Pump Engineering BV.