D658SDE-01

PUMP SERVICE BOOK

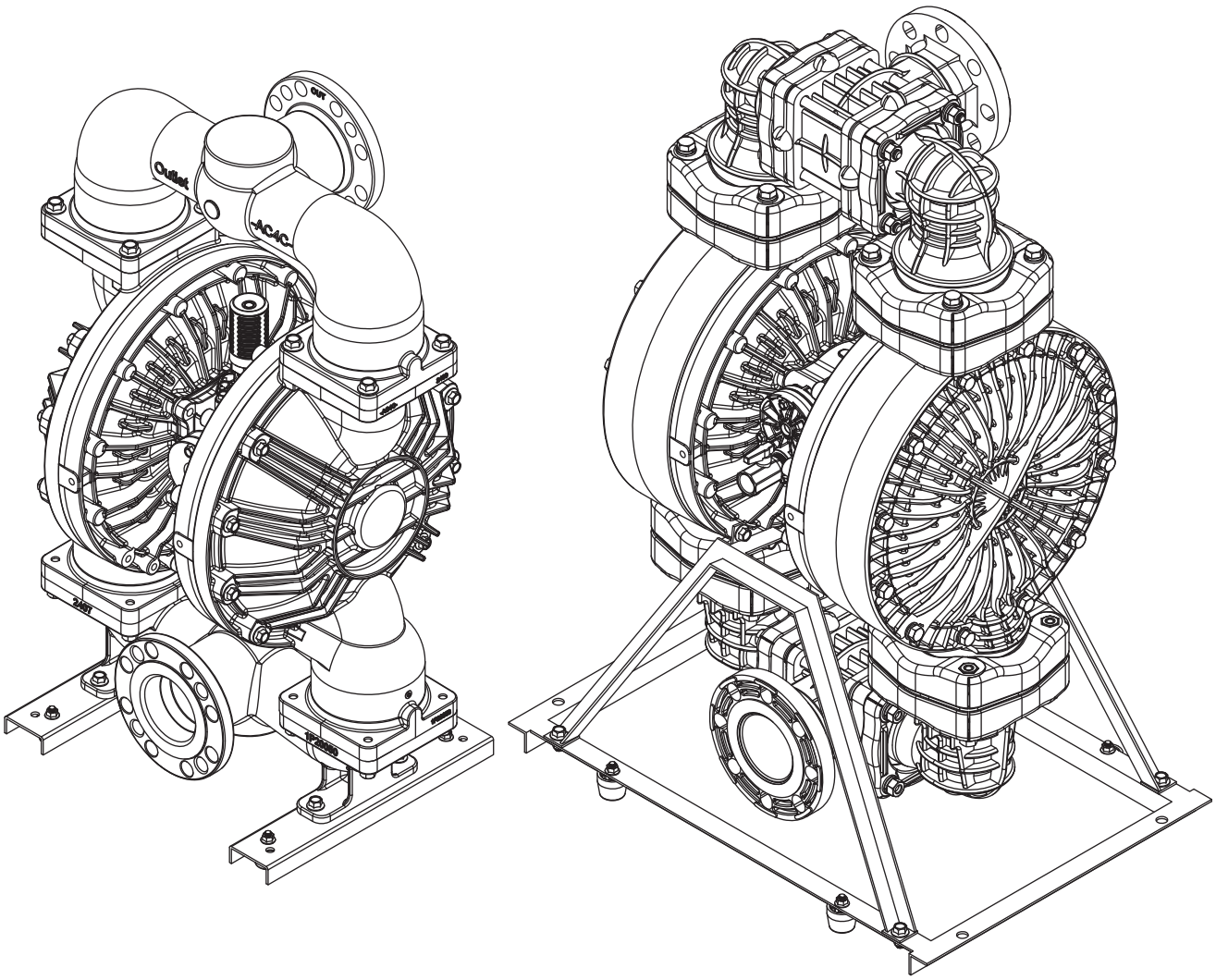

Type 800A-M 800S-M 800G-M

Series Pumps

HOW TO USE THE PUMP SERVICE BOOK

Type 800-M Series Pumps

- The servicing method for each pump can be different depending on the model and size. Please refer to the “Model Name” noted on the Pump Identification Plate and use the below table as a page number and diagram reference guide.

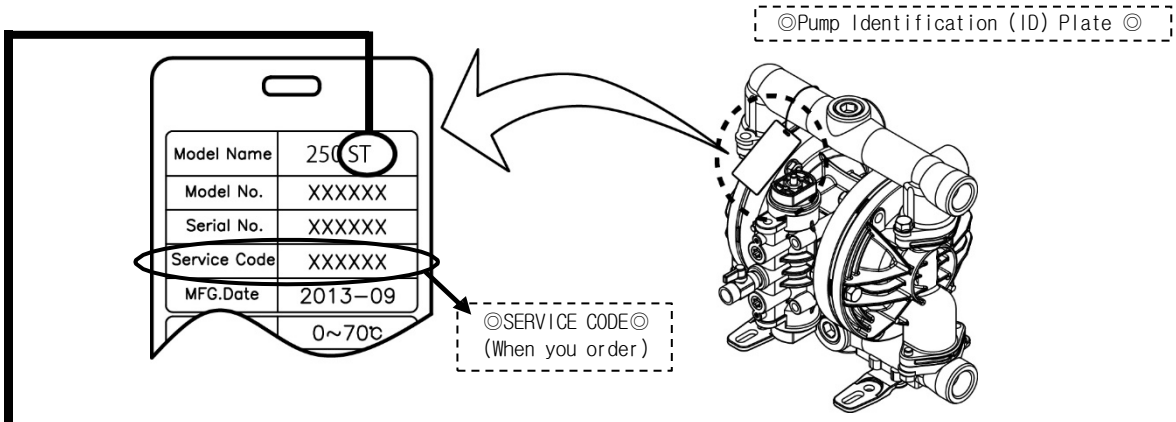

	・BALL ・VALVE SEAT	・DIAPHRAGM	・CENTER DISK DIAPHRAGM Mounting Direction ・CENTER ROD ・OUT CHAMBER	・BEARING CENTER ROD	・VALVEBODY ASSEMBLY	・Switching body	※2 ・Grease Re-application	・Exploded View ※1 ・Assembly torque values / Re-torque values
Pump Model Code	**Section & Diagram Reference Numbers**							
AC AN AE AV	1-①	2-①	3-①	4	5	6	7	8-①
AH AS	1-①	2-①	3-②	4	5	6	7	8-①
AT	1-①	2-①	3-③	4	5	6	7	8-①
AW	1-①	2-③	3-⑦	4	5	6	7	8-①
SC SN SE SV	1-①	2-②	3-①	4	5	6	7	8-②
SH SS	1-①	2-②	3-②	4	5	6	7	8-②
ST	1-①	2-②	3-③	4	5	6	7	8-②
SW	1-①	2-④	3-⑦	4	5	6	7	8-②
GC GN GE GV	1-②	2-⑤	3-④	4	5	6	7	8-③
GH GS	1-②	2-⑤	3-⑤	4	5	6	7	8-③
GT	1-②	2-⑤	3-⑥	4	5	6	7	8-③
GW	1-②	2-⑥	3-⑦	4	5	6	7	8-③

※1) Before operating the pump for the first time please re-torque all bolts. Also re-torque bolts if leaks are discovered as part of the daily inspection regime.
※2) Apply grease every 3million cycles.

Description of Diagrams used within the Pump Service Book

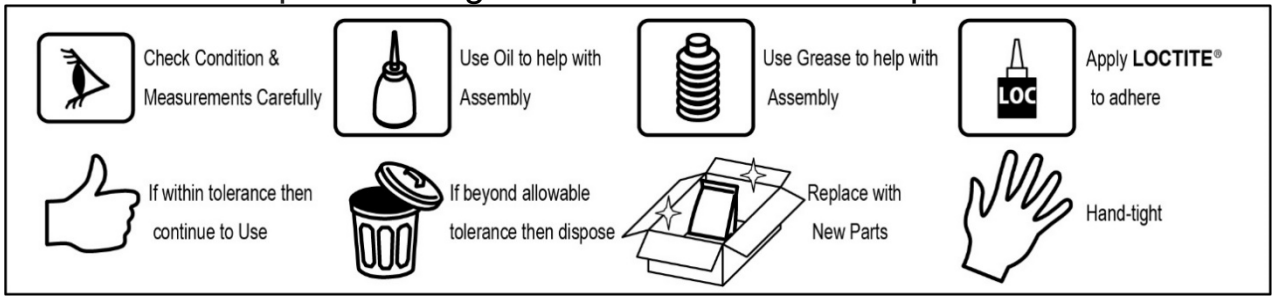

⚠ WARNING

For your own safety and the safety of the people around you, be sure to read the procedures noted within carefully before performing maintenance on this product. After reading this document, be sure to keep it handy for future reference.

⚠ WARNING

Before commencing any maintenance work, disconnect the compressed air supply and remove and clean any remaining liquids contained on around or within the pump. If liquids are not removed or neutralized then there is a possibility of a serious injury such as burns, blindness, poisoning or even death if chemicals adhere to the skin eyes or are accidentally inhaled or swallowed. If residual air pressure is present within the pump there could be a danger of sudden decompression or explosion resulting in severe injury or even death. In case of disassembling, be sure to wear protective equipment, such as face mask, gloves, etc. When replacing spare parts, be sure to use genuine parts. The installation and use of non-specified parts may cause a malfunction or damage to the product.

Service Tools

ⓐ PP Wrench (Can be purchased separately)

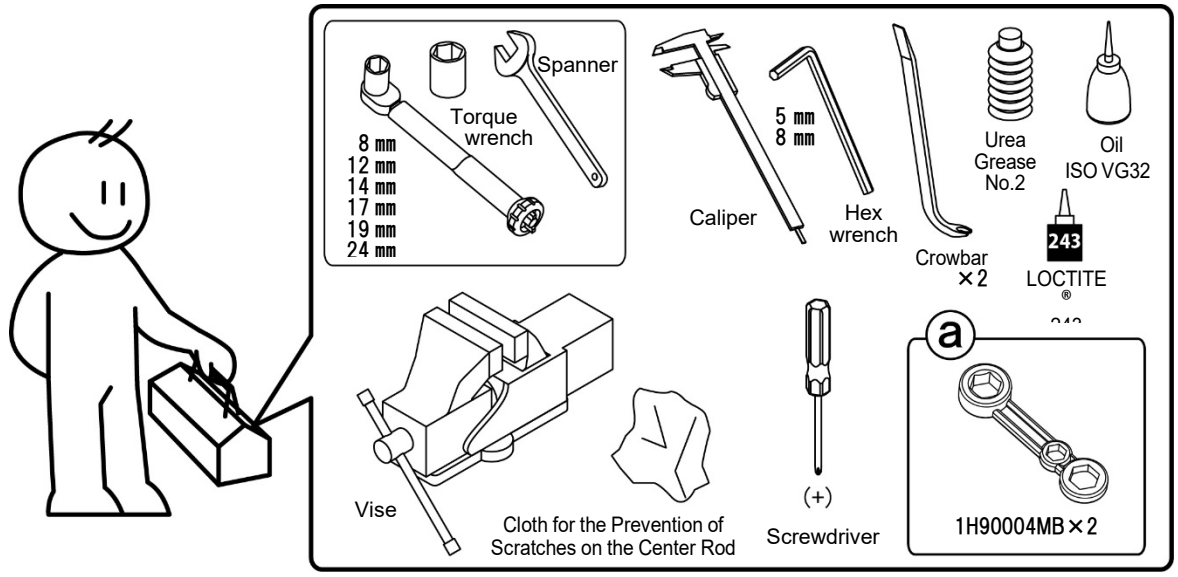

Recommended changeover time for the replacement of diaphragms ※

CR, NBR, EPDM	10 million cycles
FKM	2.5 million cycles
PTFE	3 million cycles
TPEE, TPO	15 million cycles
PTFE・EPDM	10 million cycles

※ Conditions: with water at room temperature and 0m head.
Conditions such as over pressurization, dry running, high or low temperature, chemical attack, abrasion etc. can drastically shorten diaphragm's life.

※ O rings and packings should be replaced during the service.

※ When reassembling the pump, please follow the disassembly procedure in reverse. For all torque values, refer to the exploded view on Section 8.

※ When ordering spare parts, please refer to the pump "SERVICE CODE" stated on the Identification plate.

※ It is recommended to apply lubricant to the sliding parts.

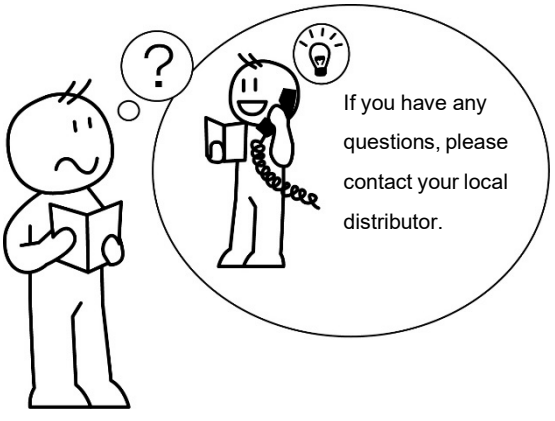

YTS Japan Co., Ltd reserves the right to change pump specifications at any time without notice.

Retightening

1. Before starting operation.
2. At quarterly inspections after installation. (Biannual if the room temperature, is maintained within ±5℃.)
3. When restarting pump operation, if the liquid or room temperature has changed significantly.
4. If you find fluid leakage on daily inspection.

1

1-① AC AN AE AV AT AH AS AW SC SN SE SV ST SH SS SW

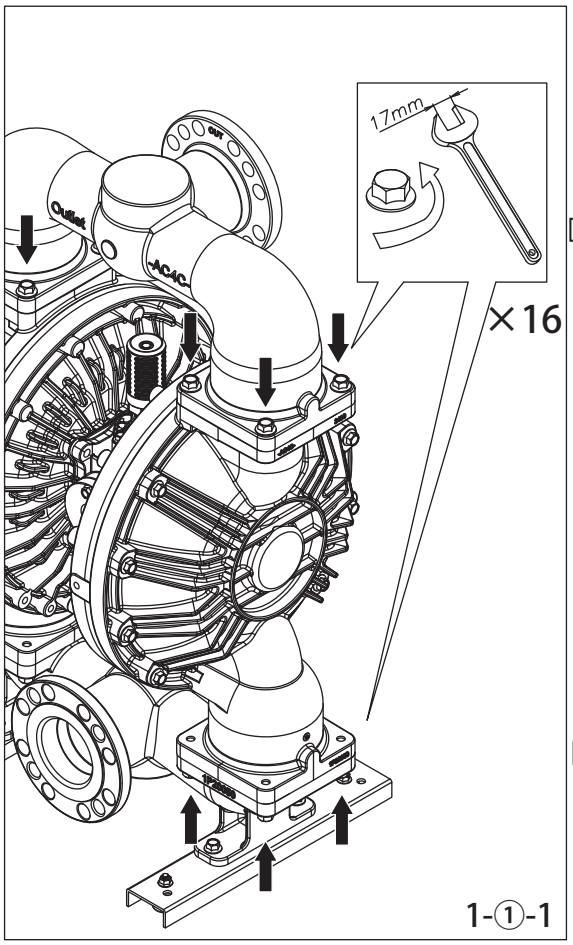

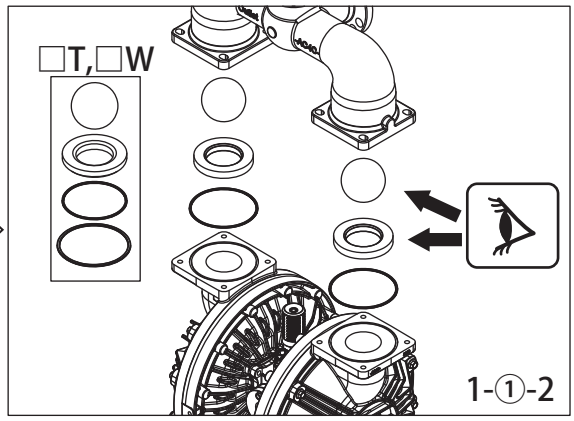

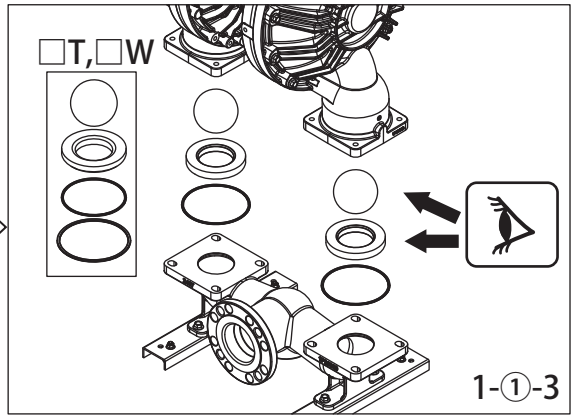

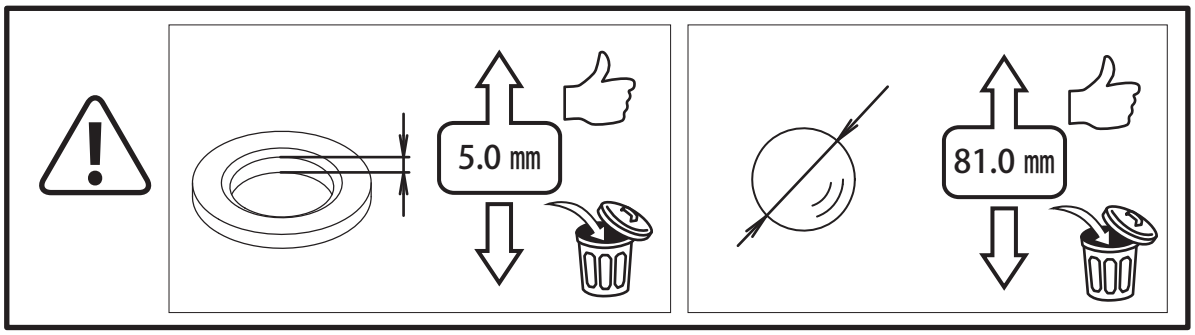

1

1-② GC GN GE GV GT GH GS GW

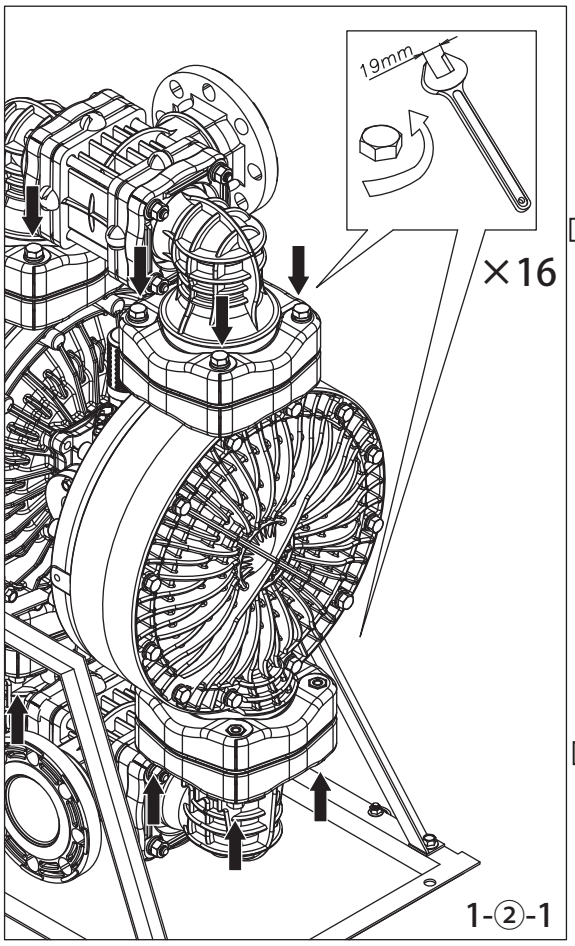

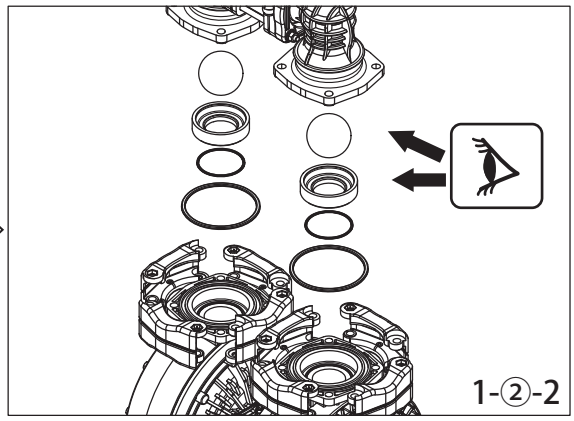

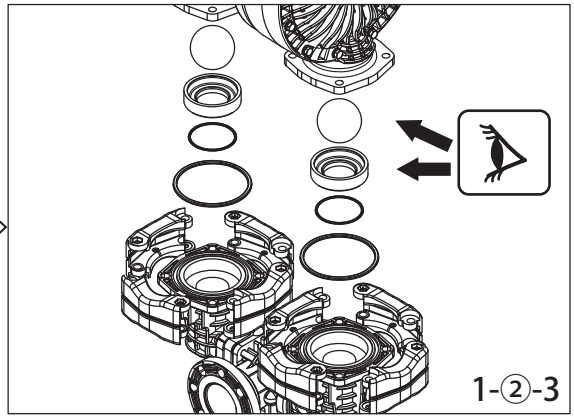

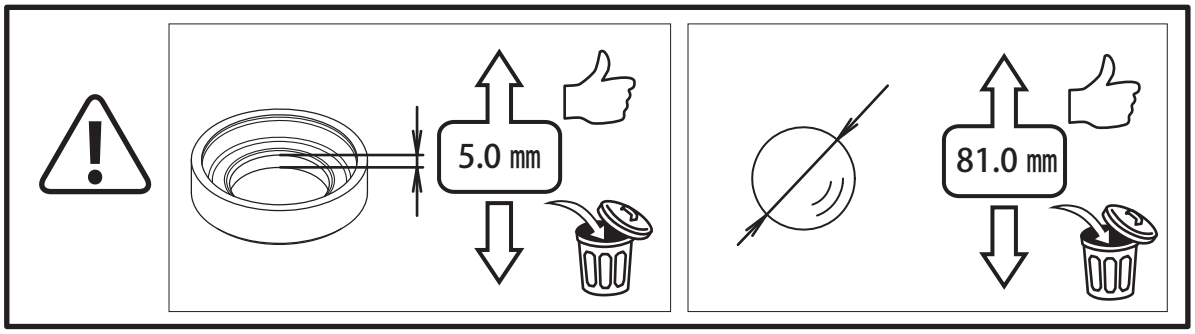

2

2-①

AC AN AE AV AT AH AS

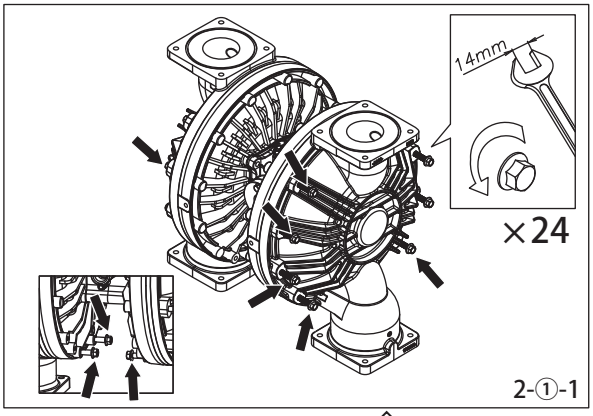

2-②

SC SN SE SV ST SH SS

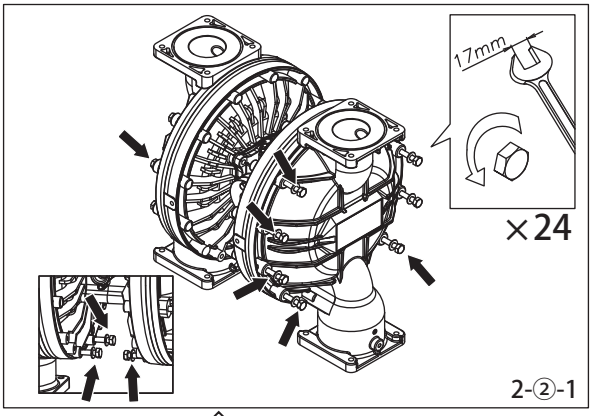

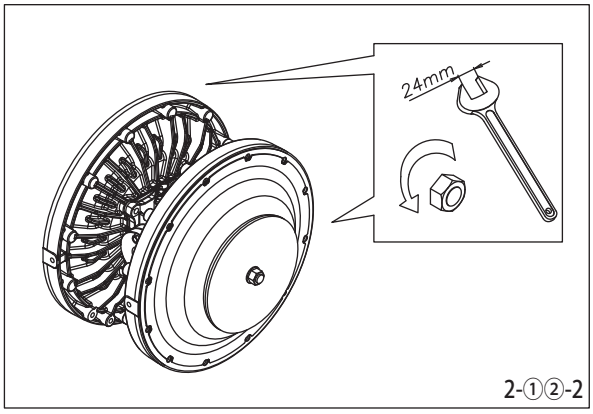

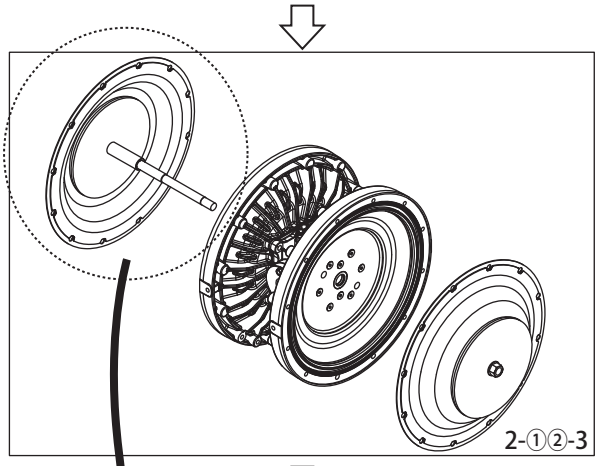

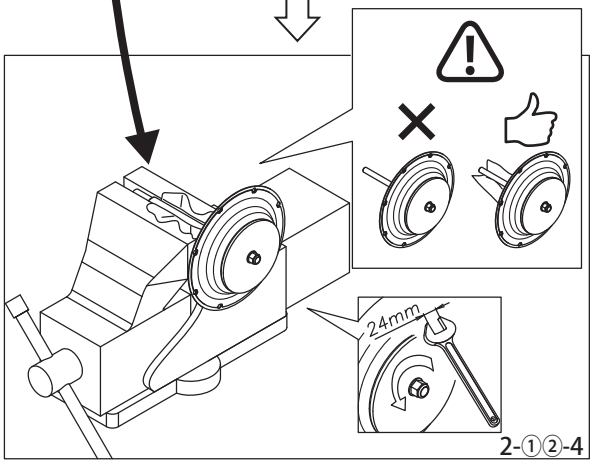

2

2-③
AW

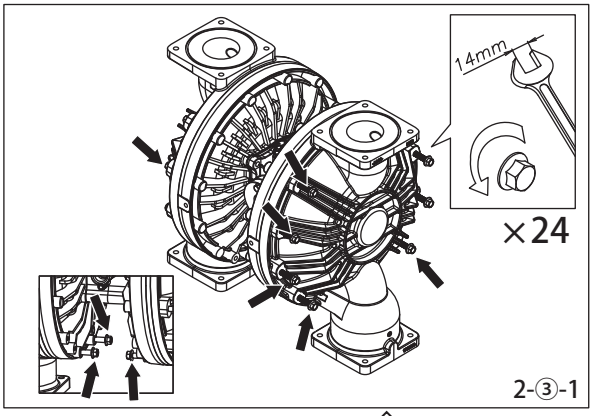

2-④
SW

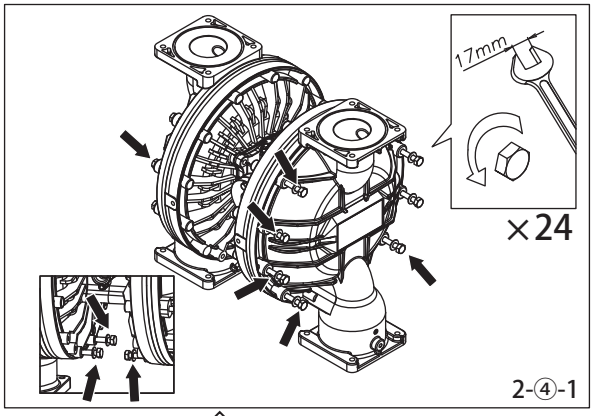

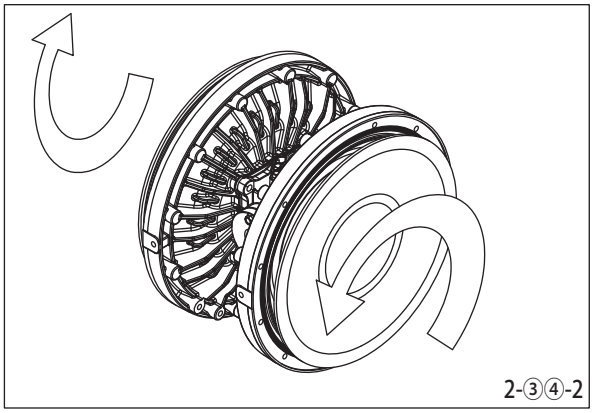

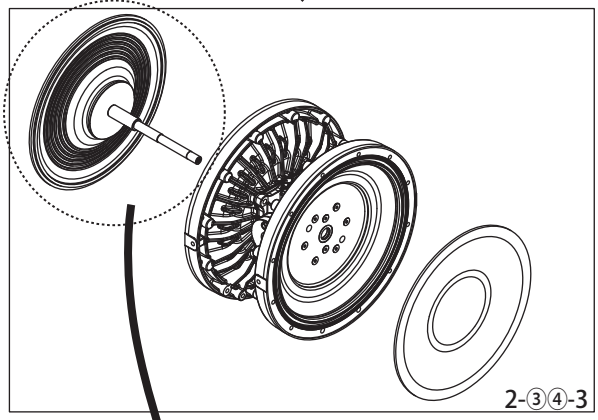

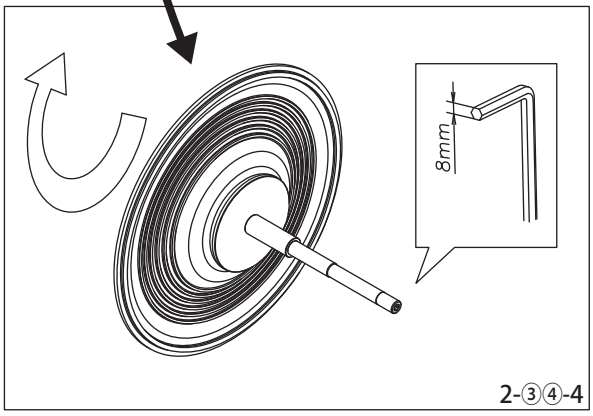

2

2-⑤

GC GN GE GV GT GH GS

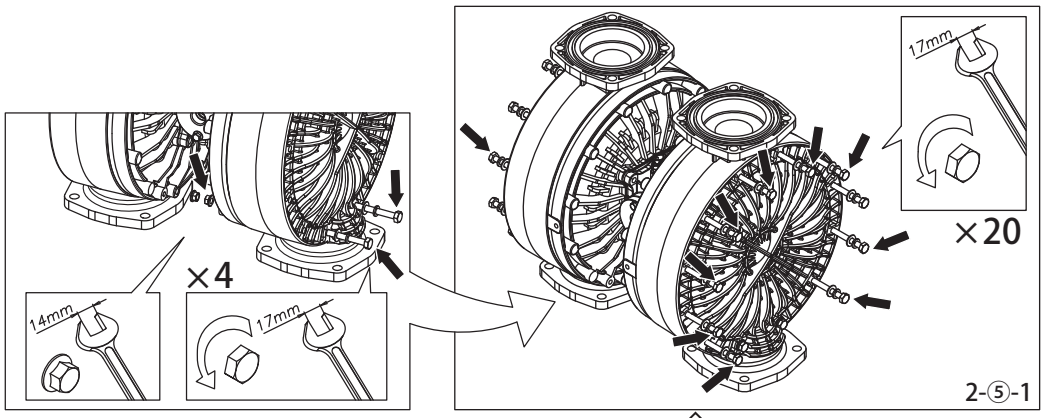

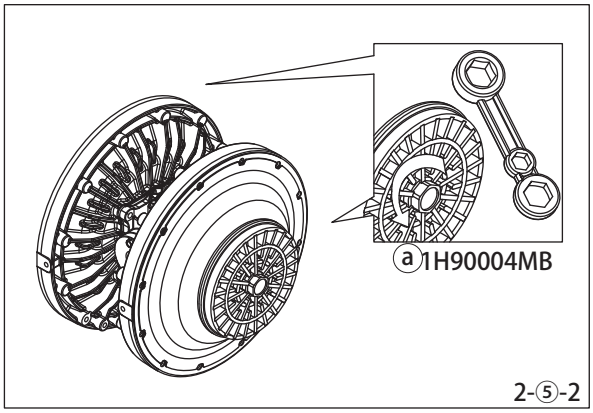

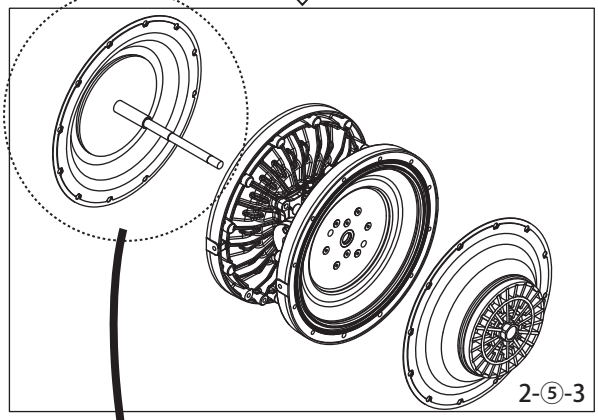

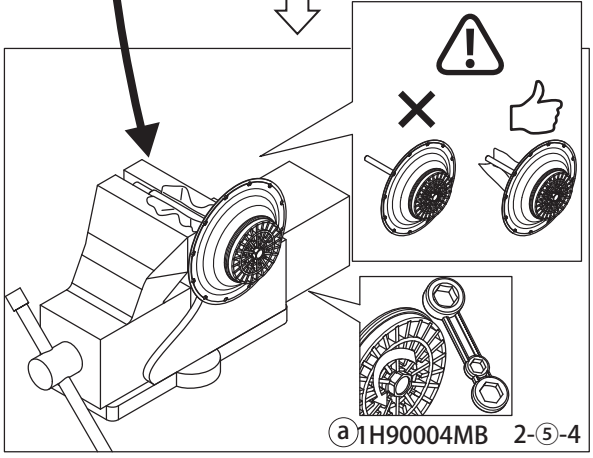

2

2-⑥

GW

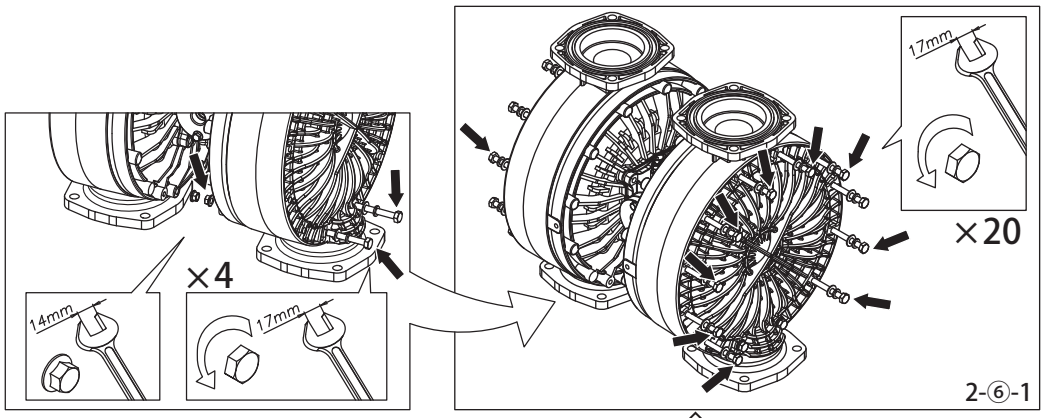

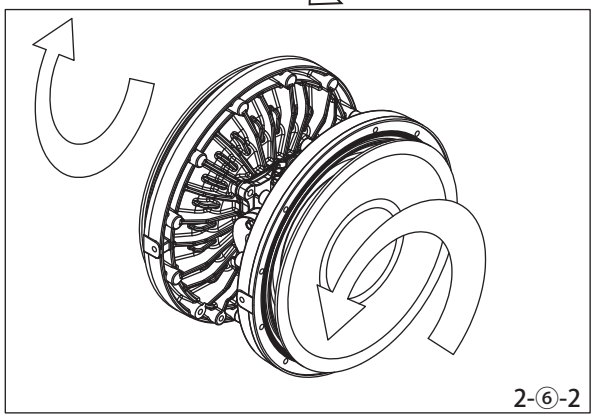

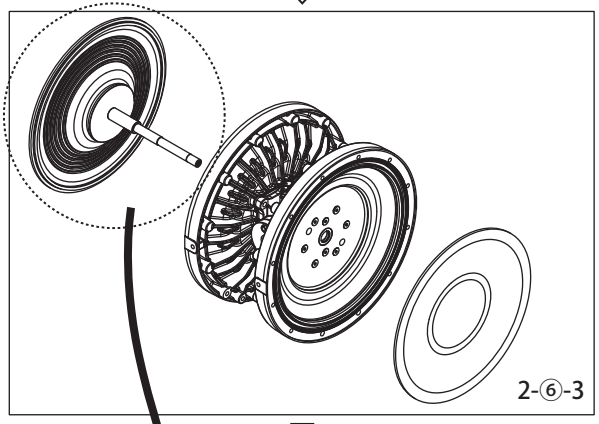

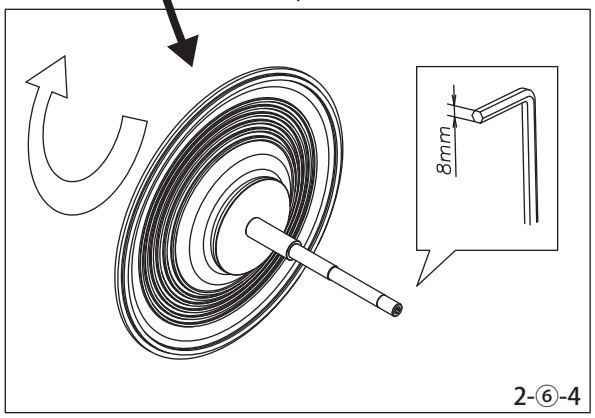

3

3-①

AC SC
AN SN
AE SE
AV SV

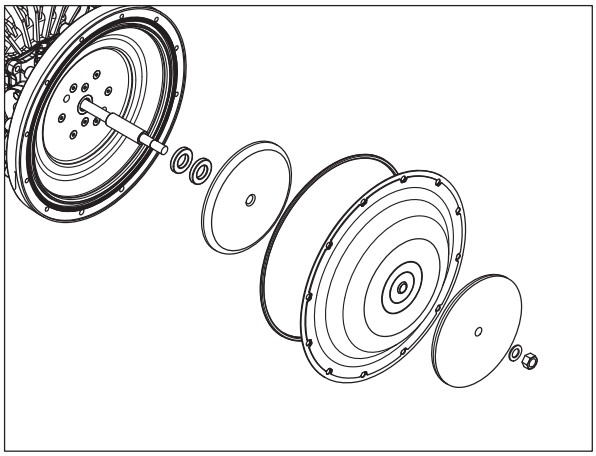

3-②

AH SH
AS SS

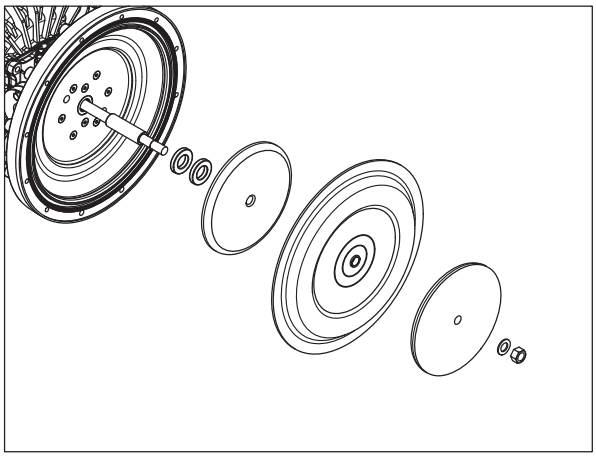

3-③

AT ST

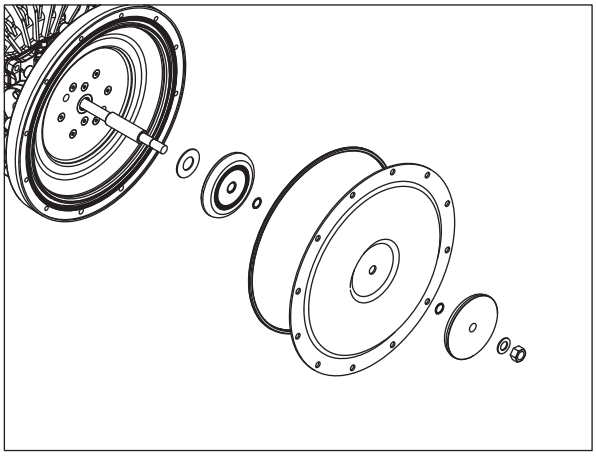

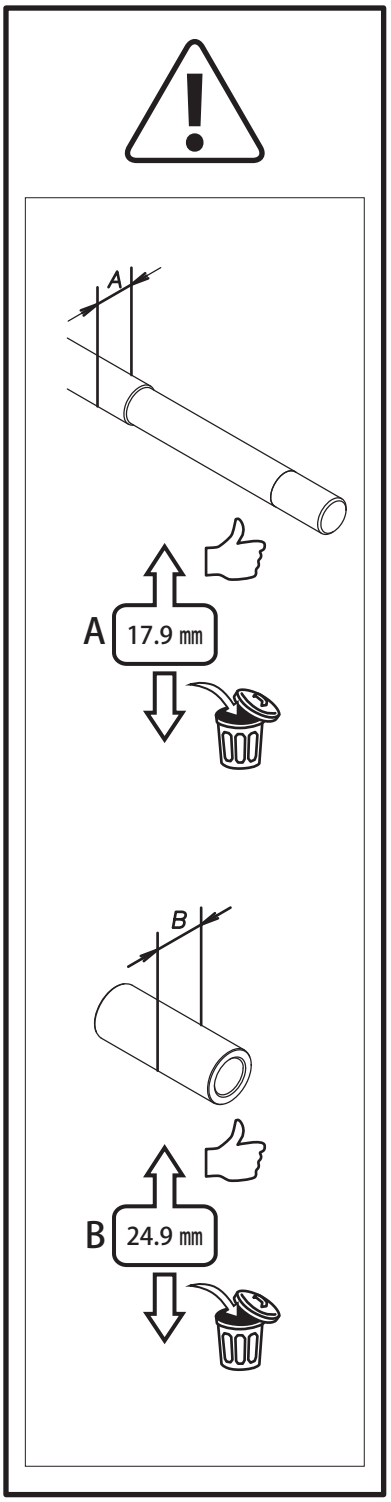

3-①
3-③

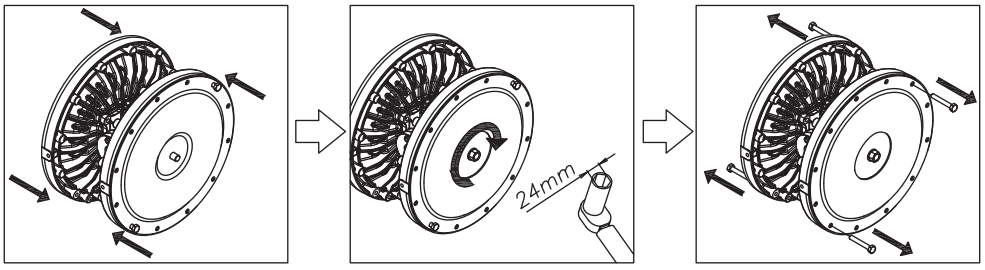

3

3-① 3-② 3-③

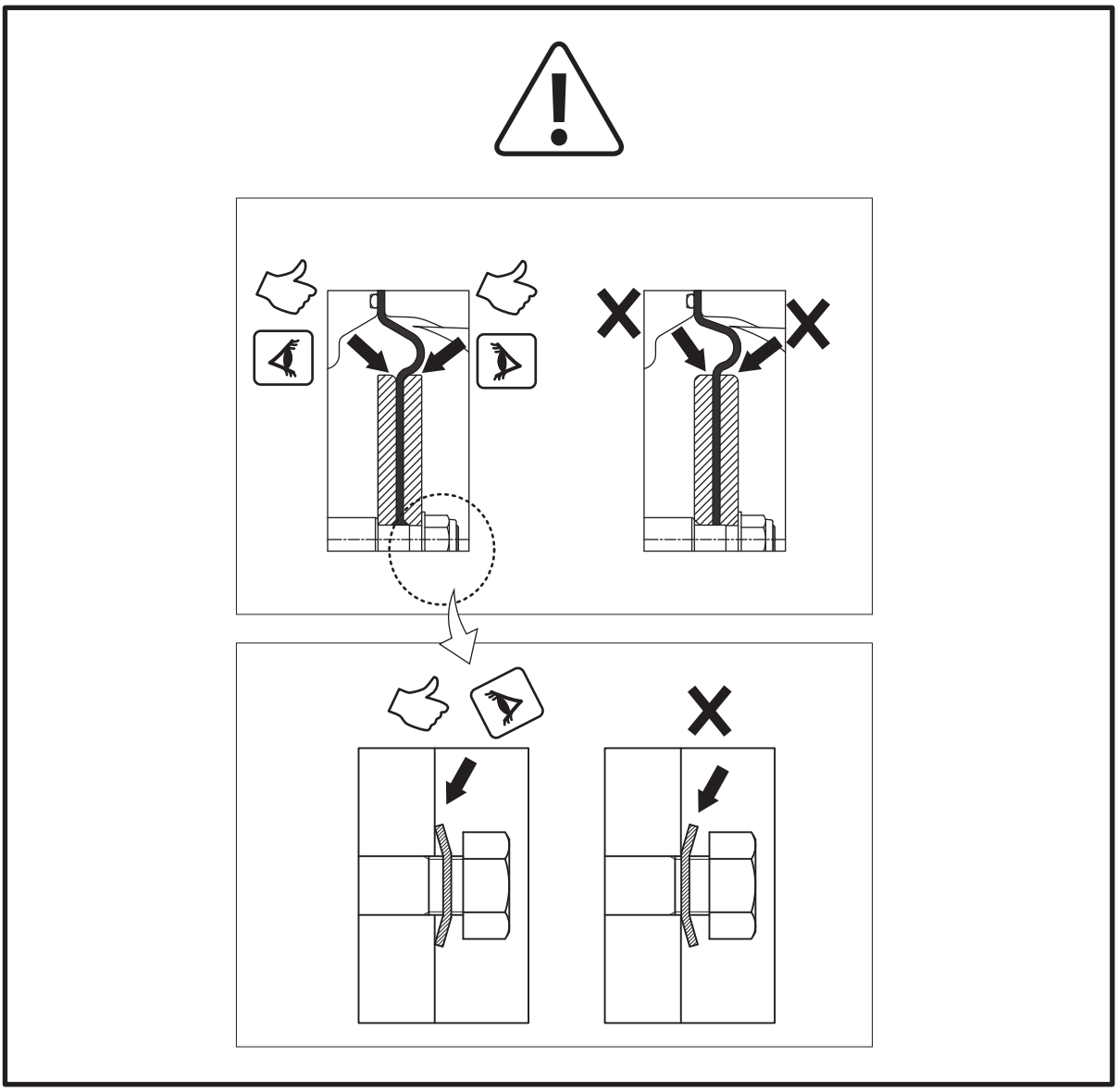

3

3-④

GC

GN

GE

GV

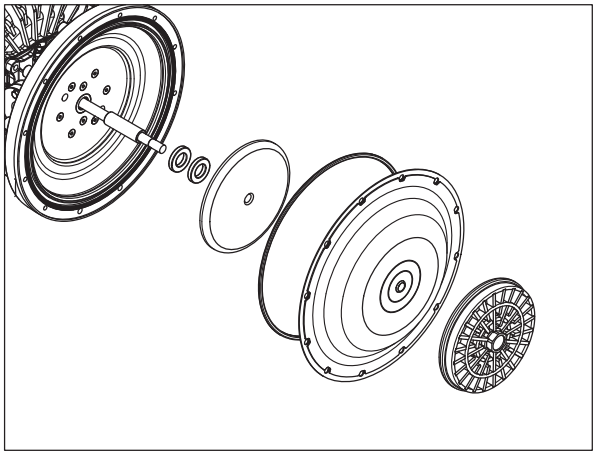

3-⑤

GH

GS

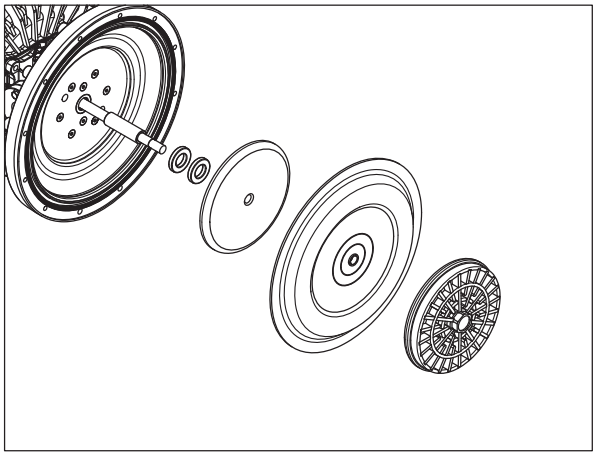

3-⑥

GT

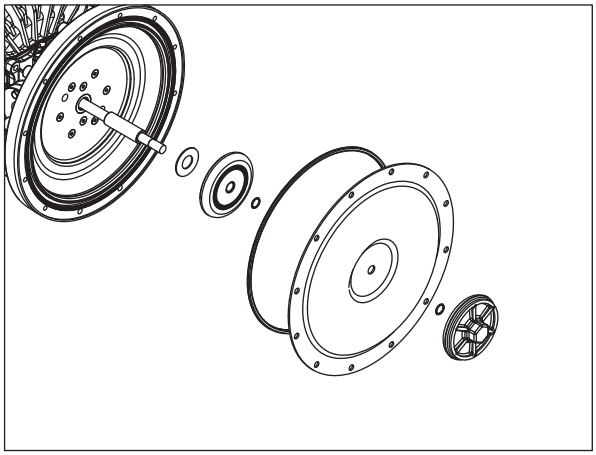

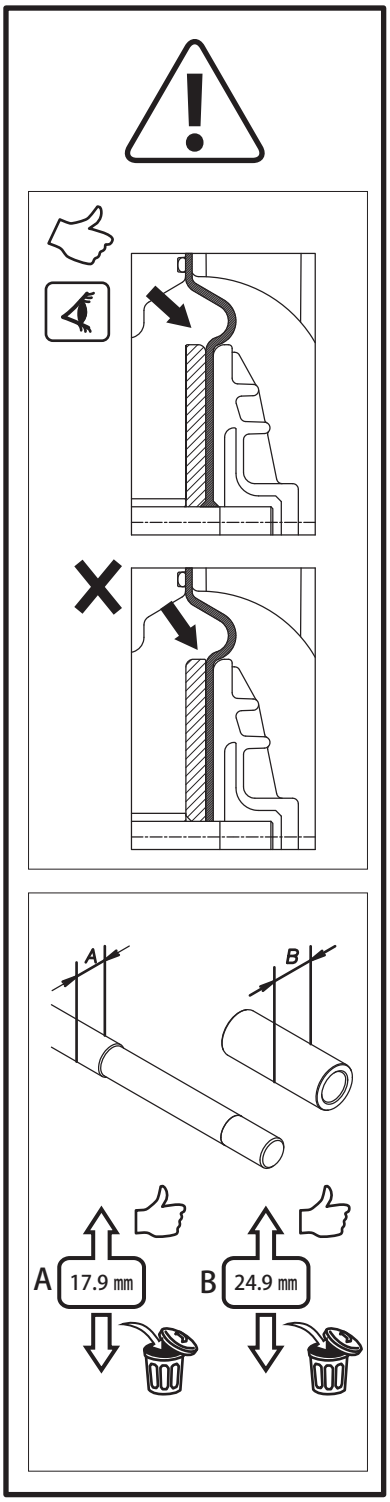



3-④

3-⑥

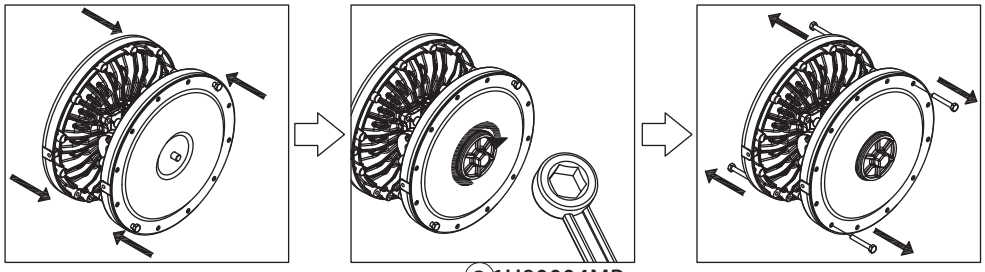

ⓐ1H90004MB

3

3-① 3-④

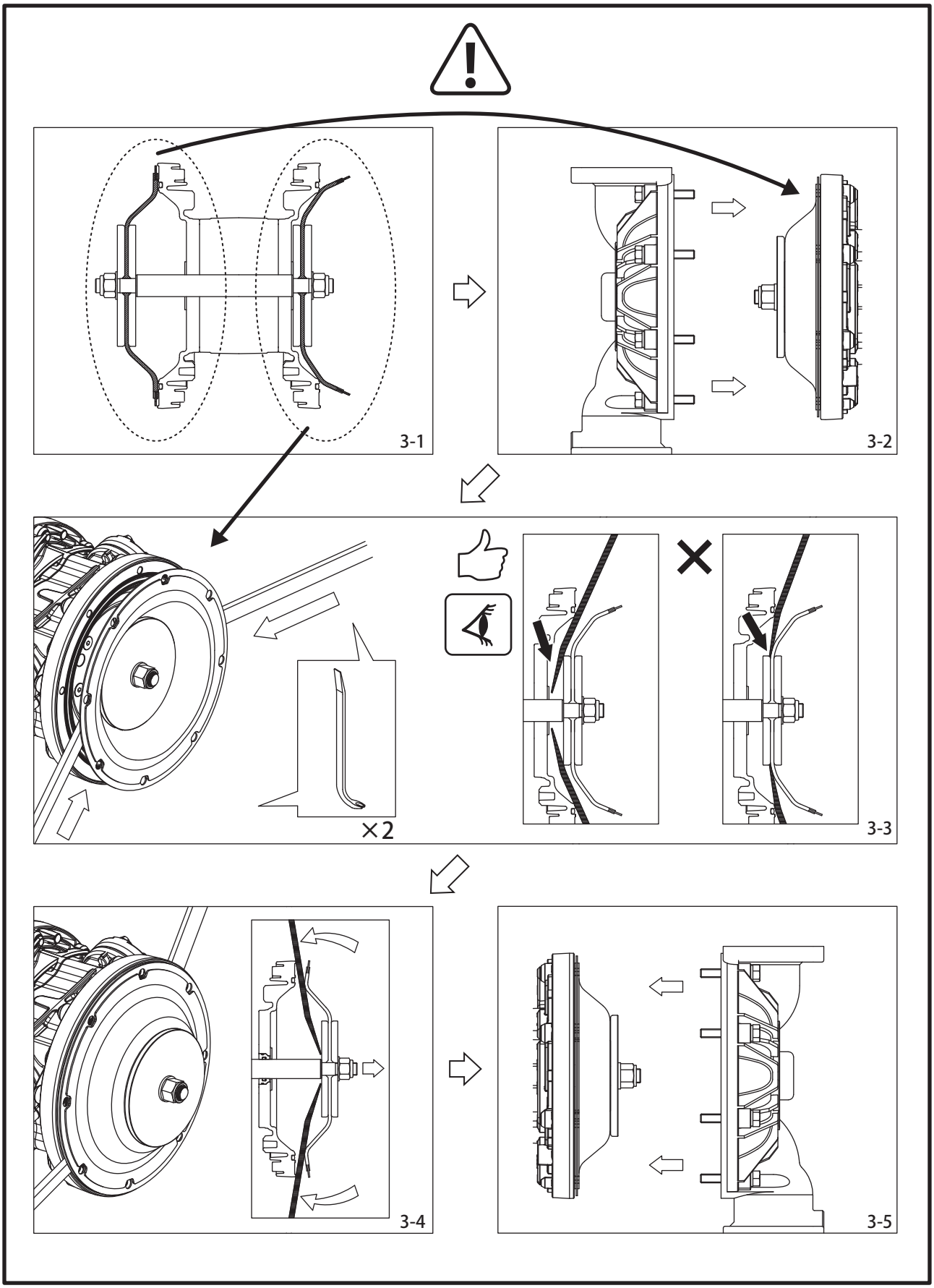

3

3-⑦

AW GW

SW

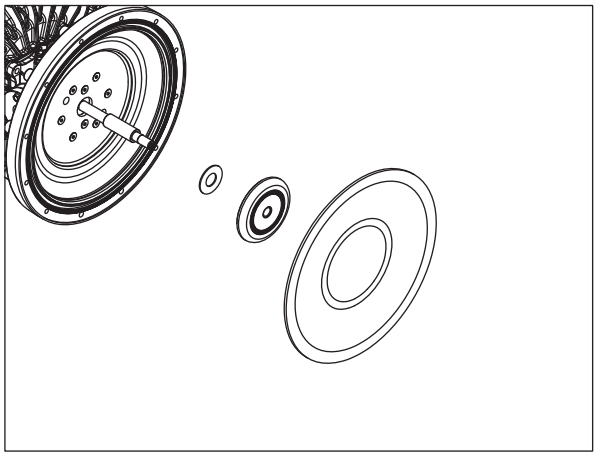

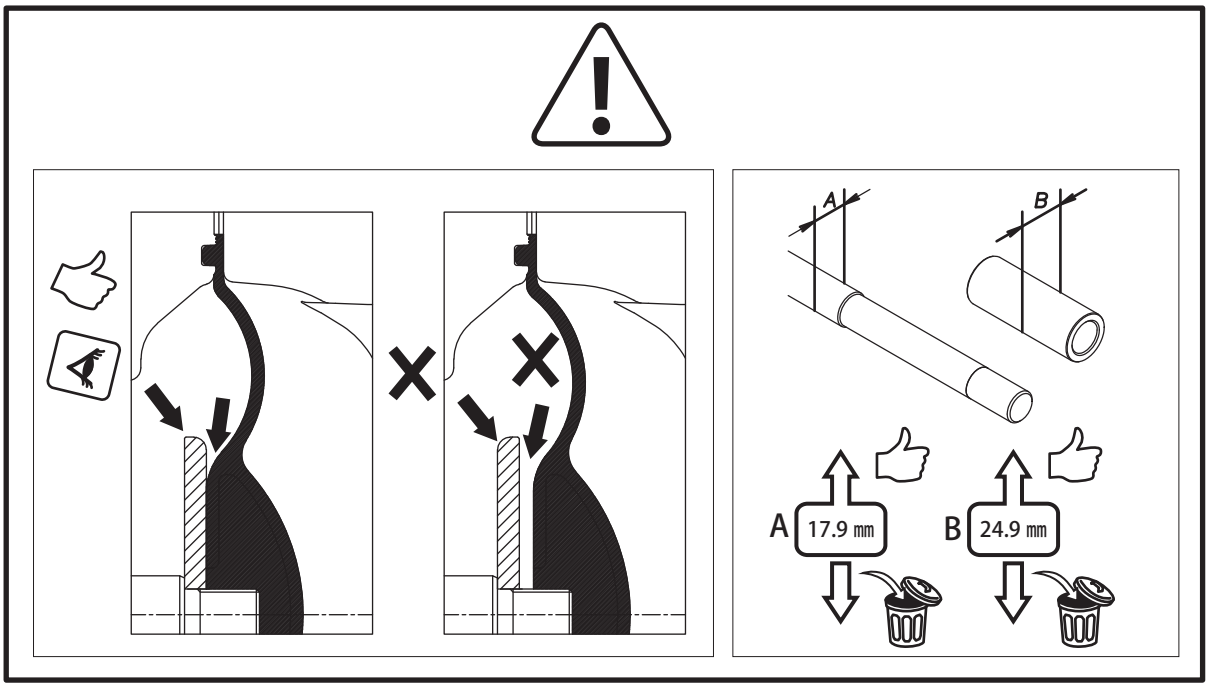

4

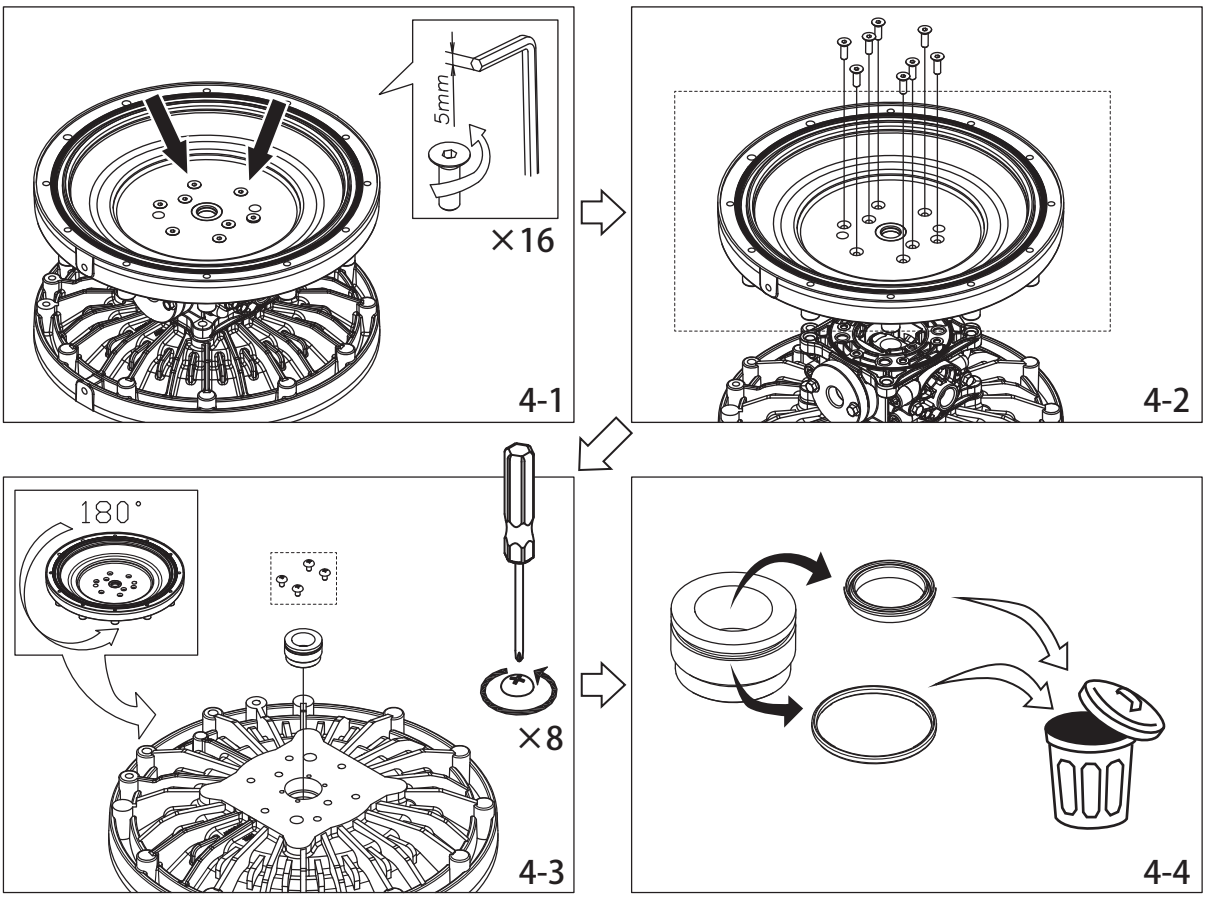

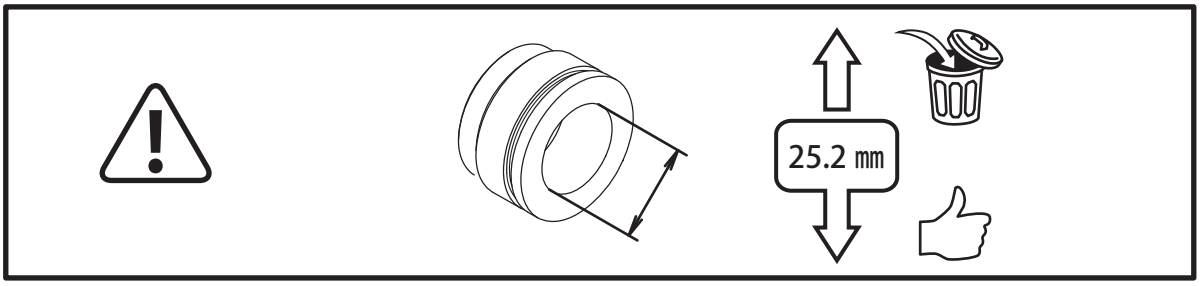

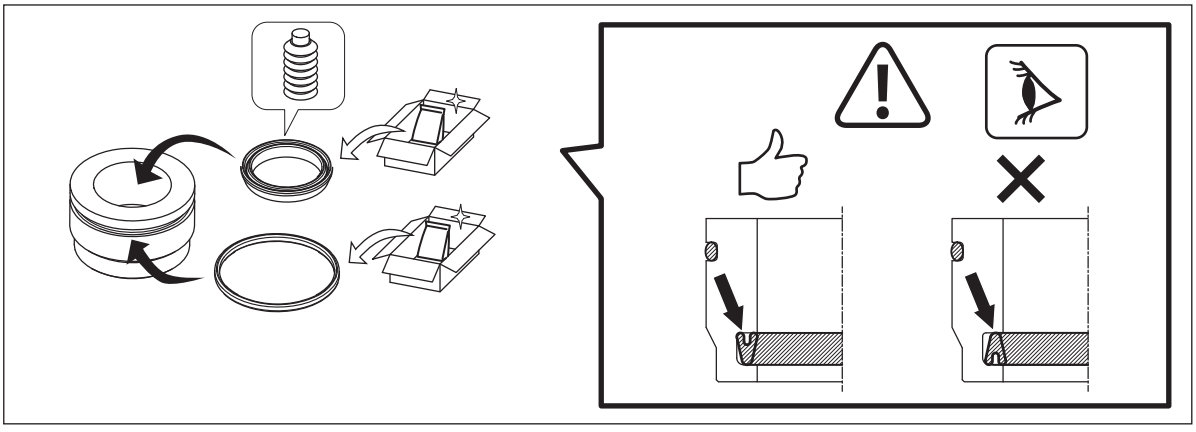

5

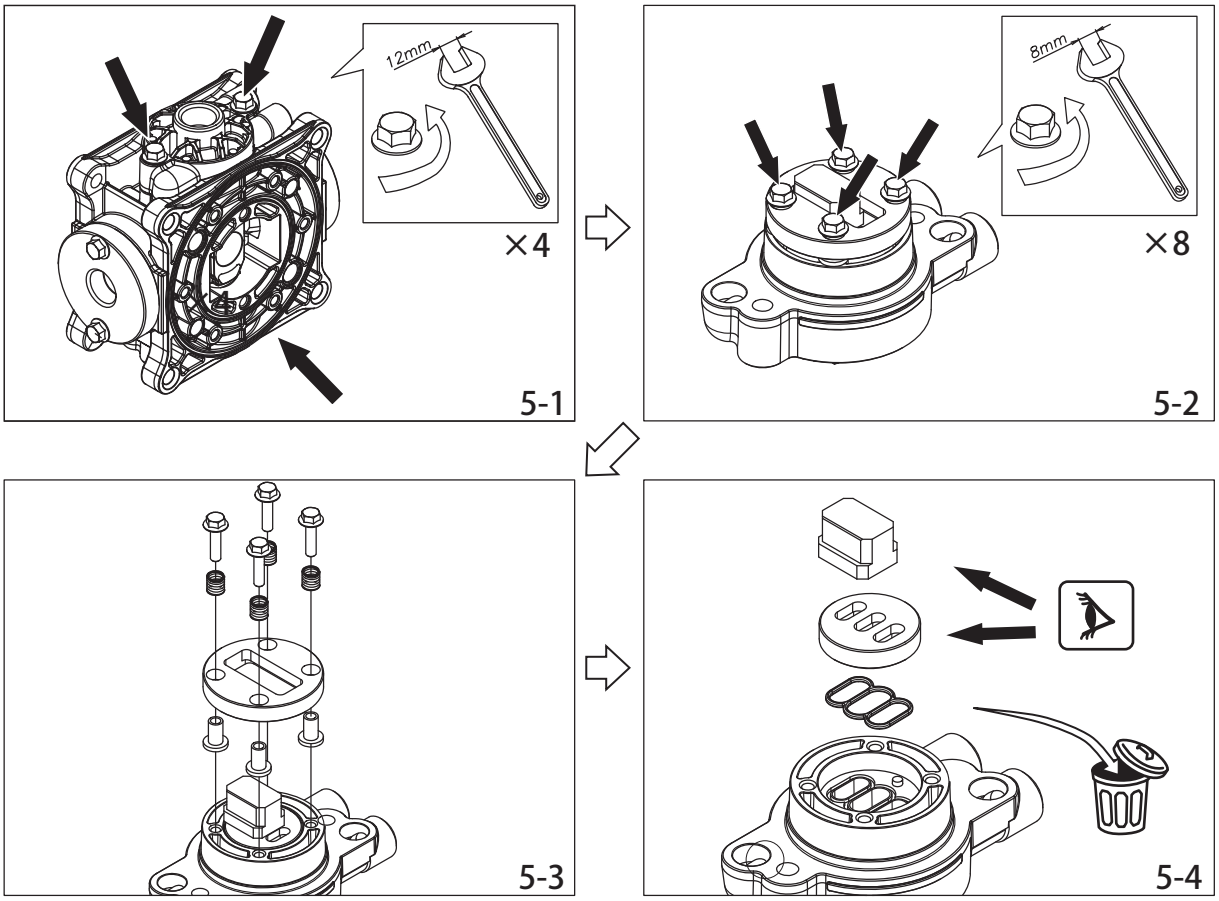

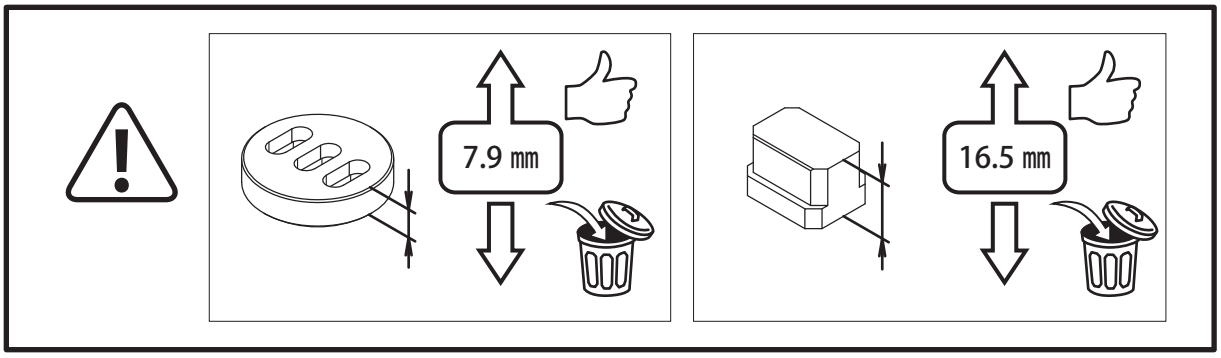

6

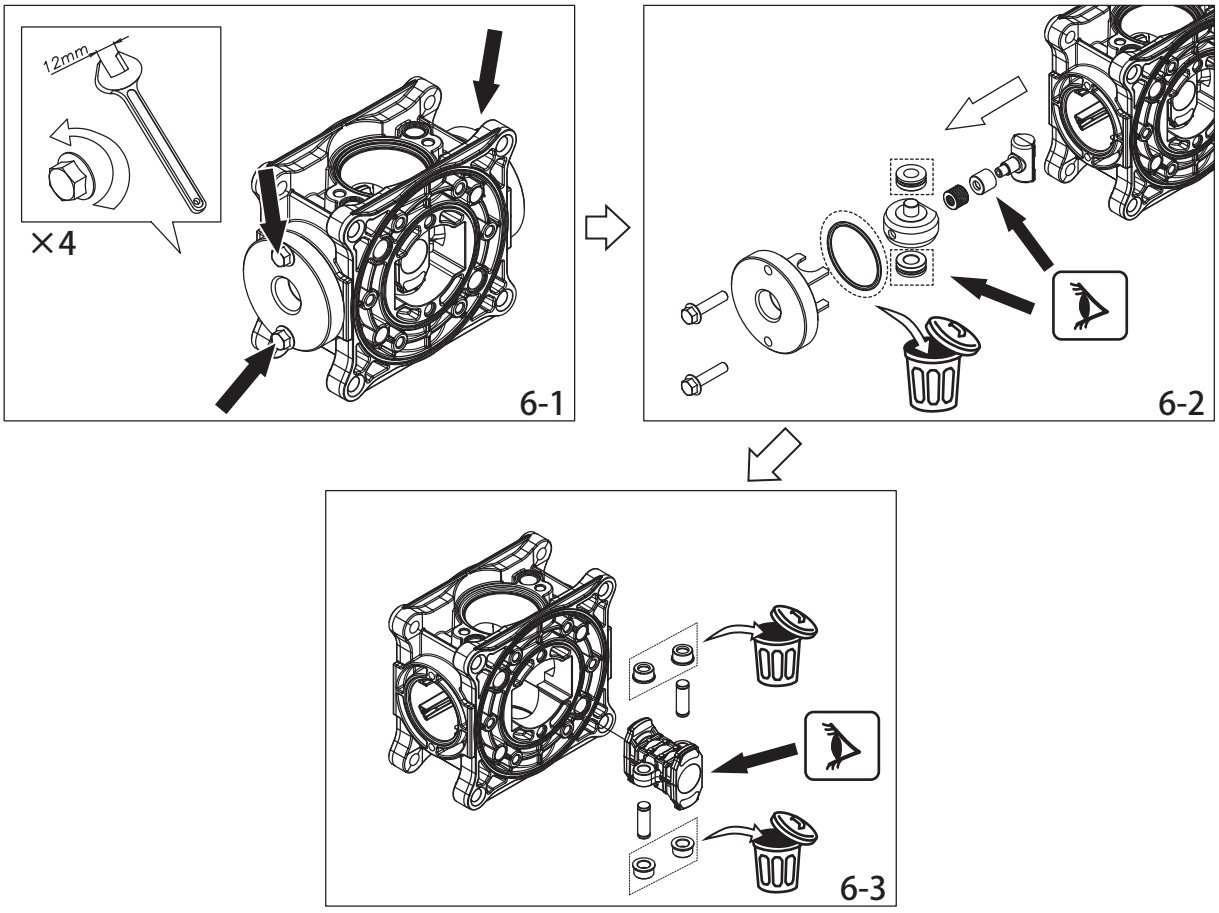

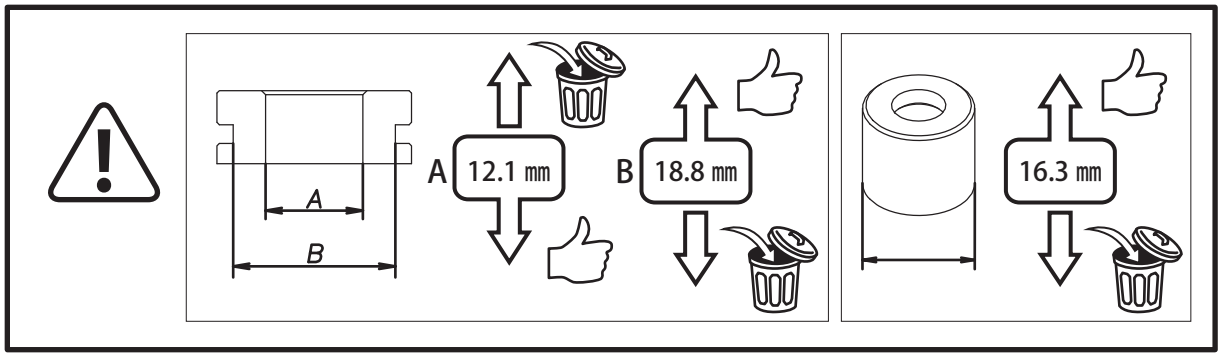

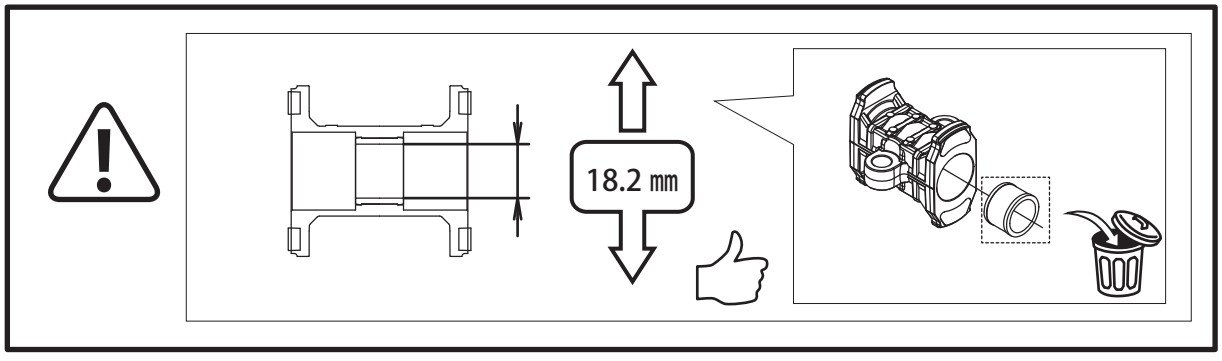

7

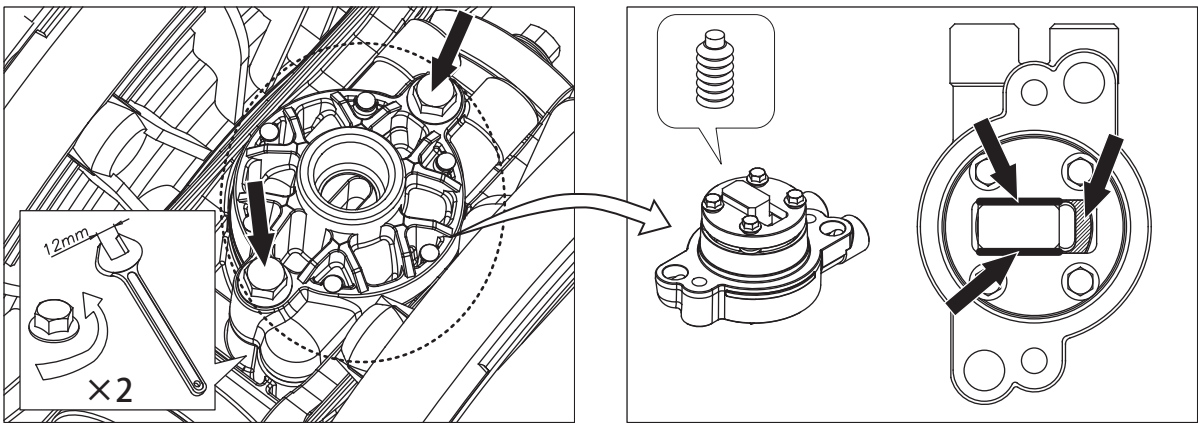

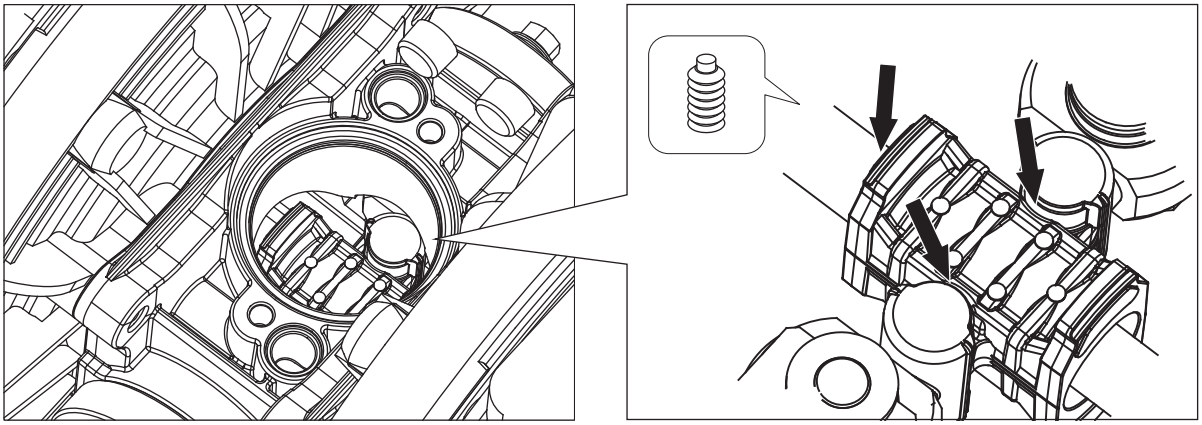

8 800A□-M

8-①

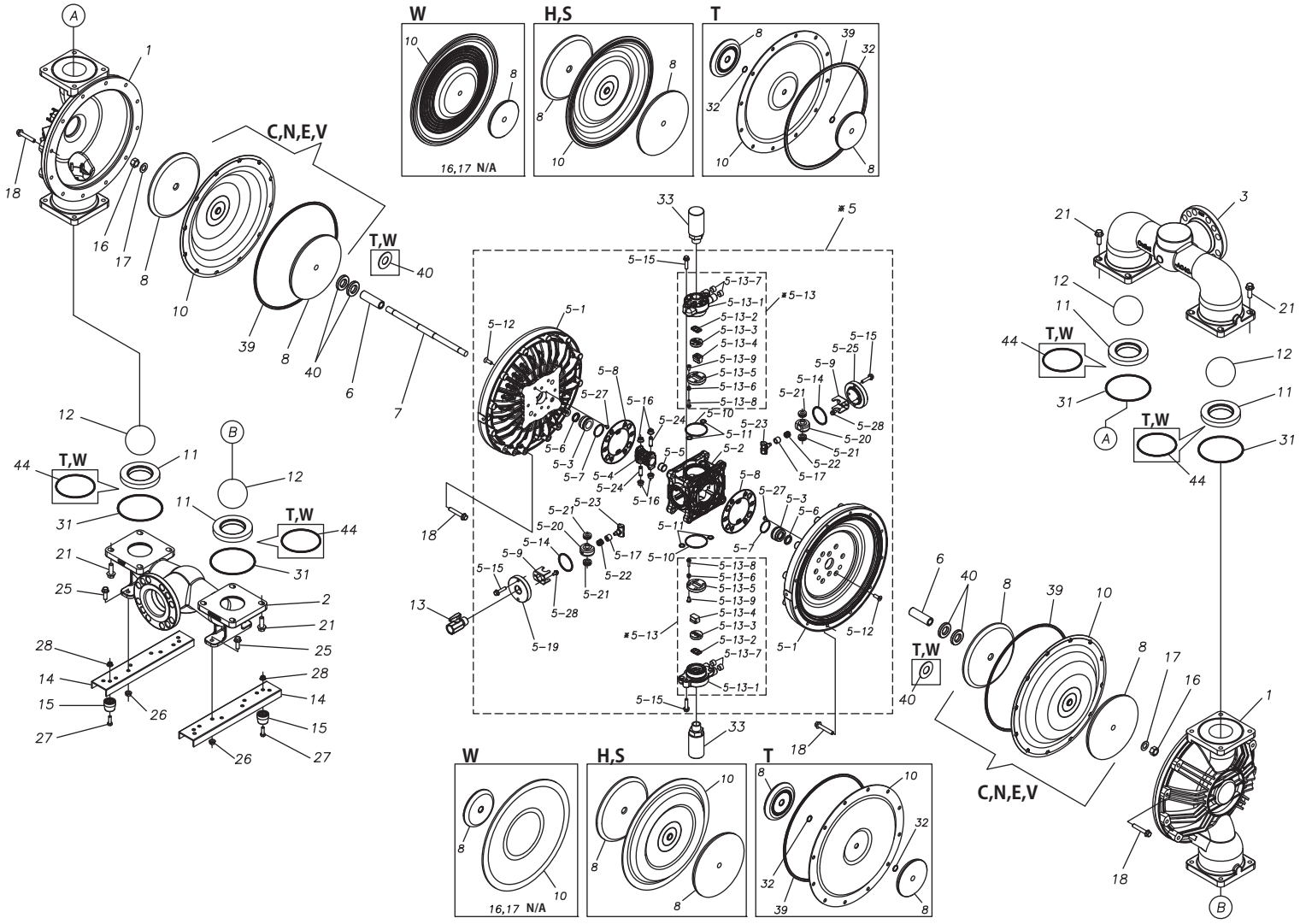

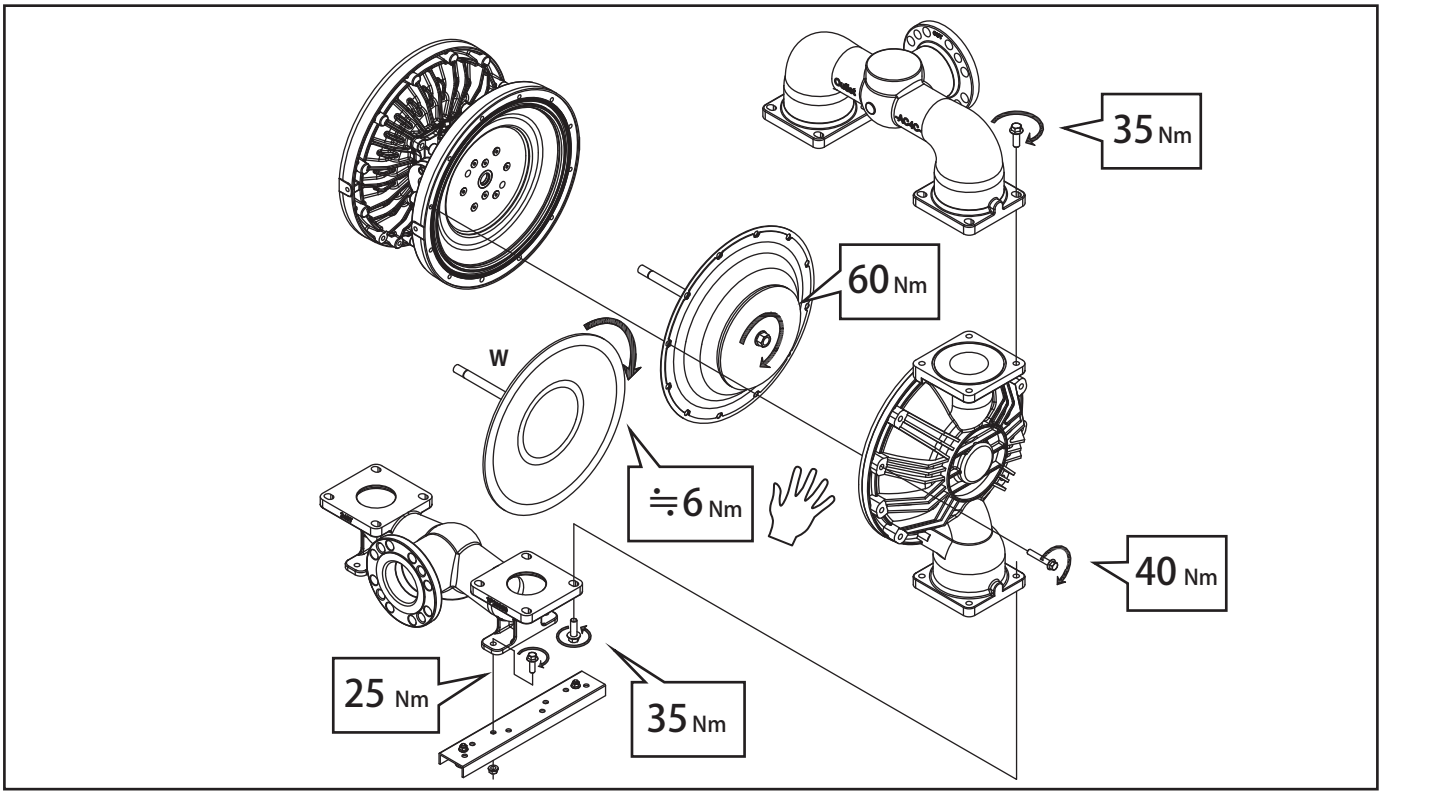

8 800S□-M

8-②

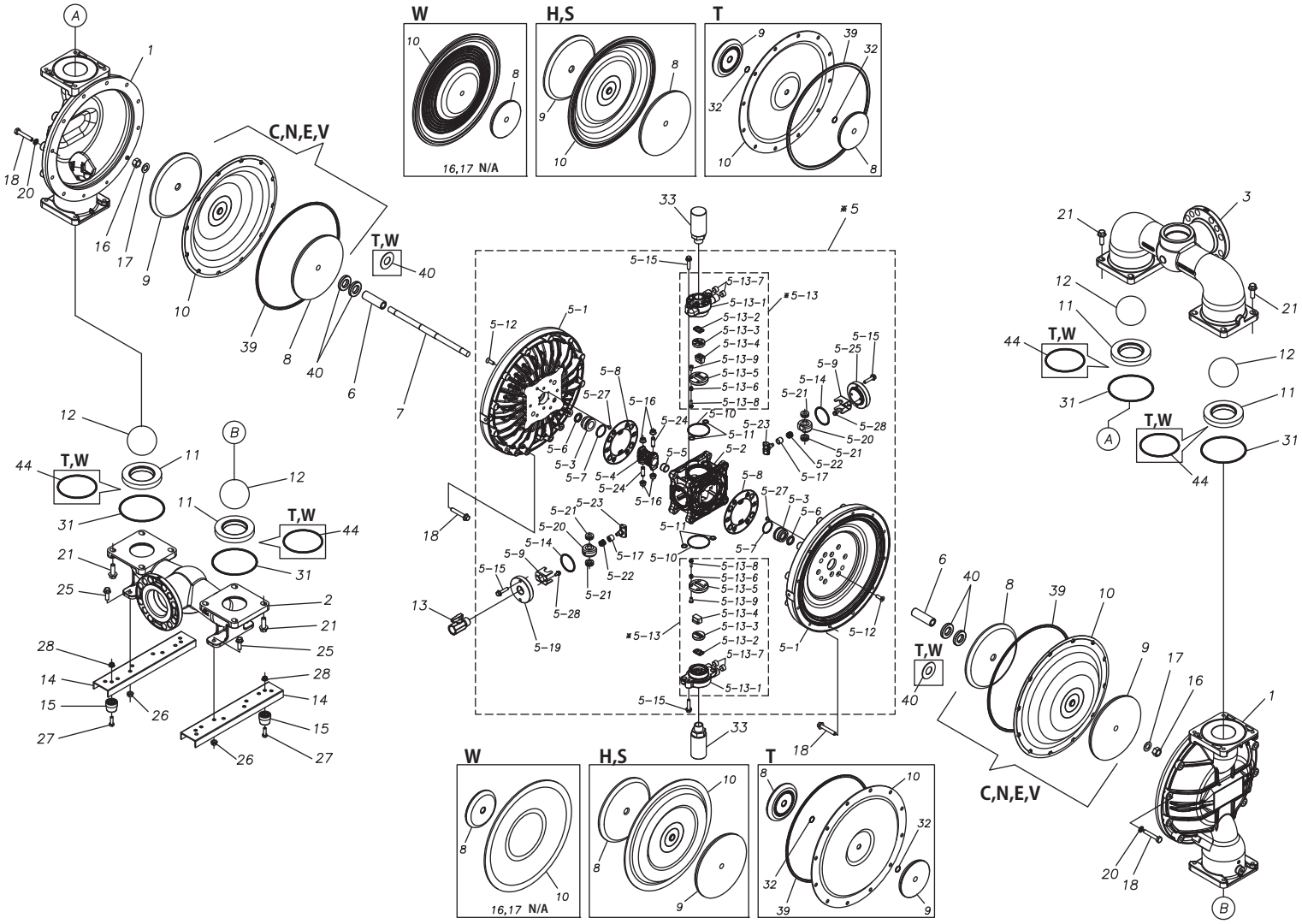

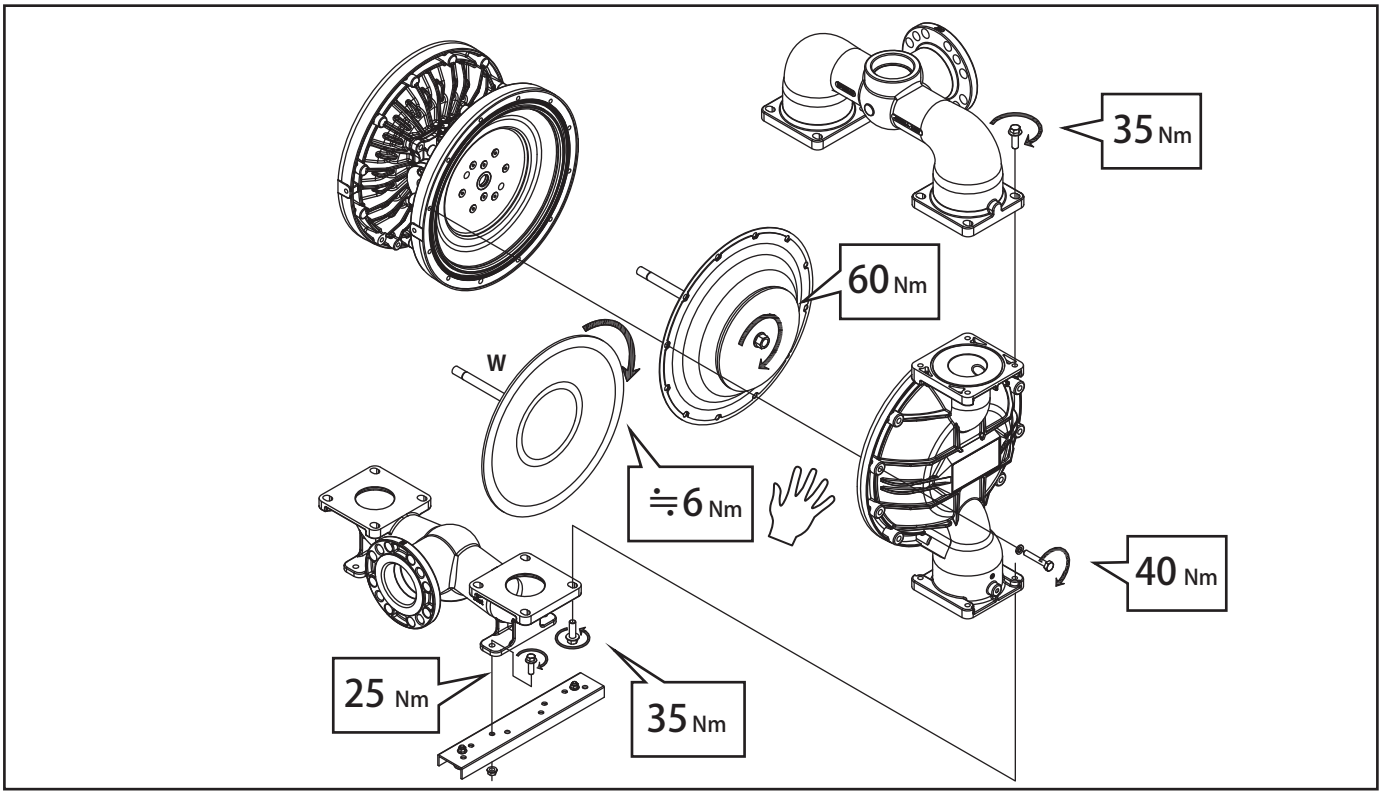

8 800G□-M

8-③

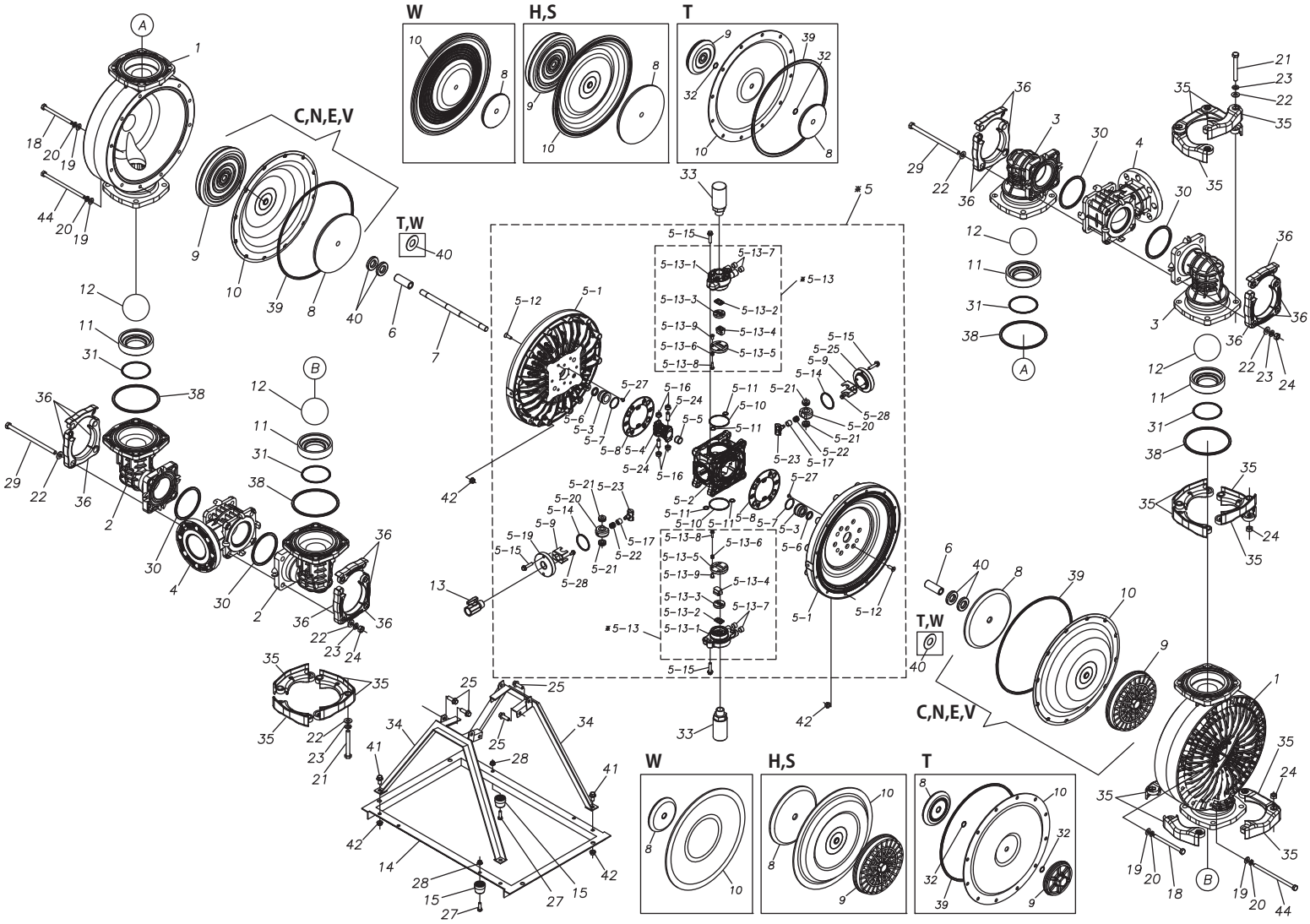

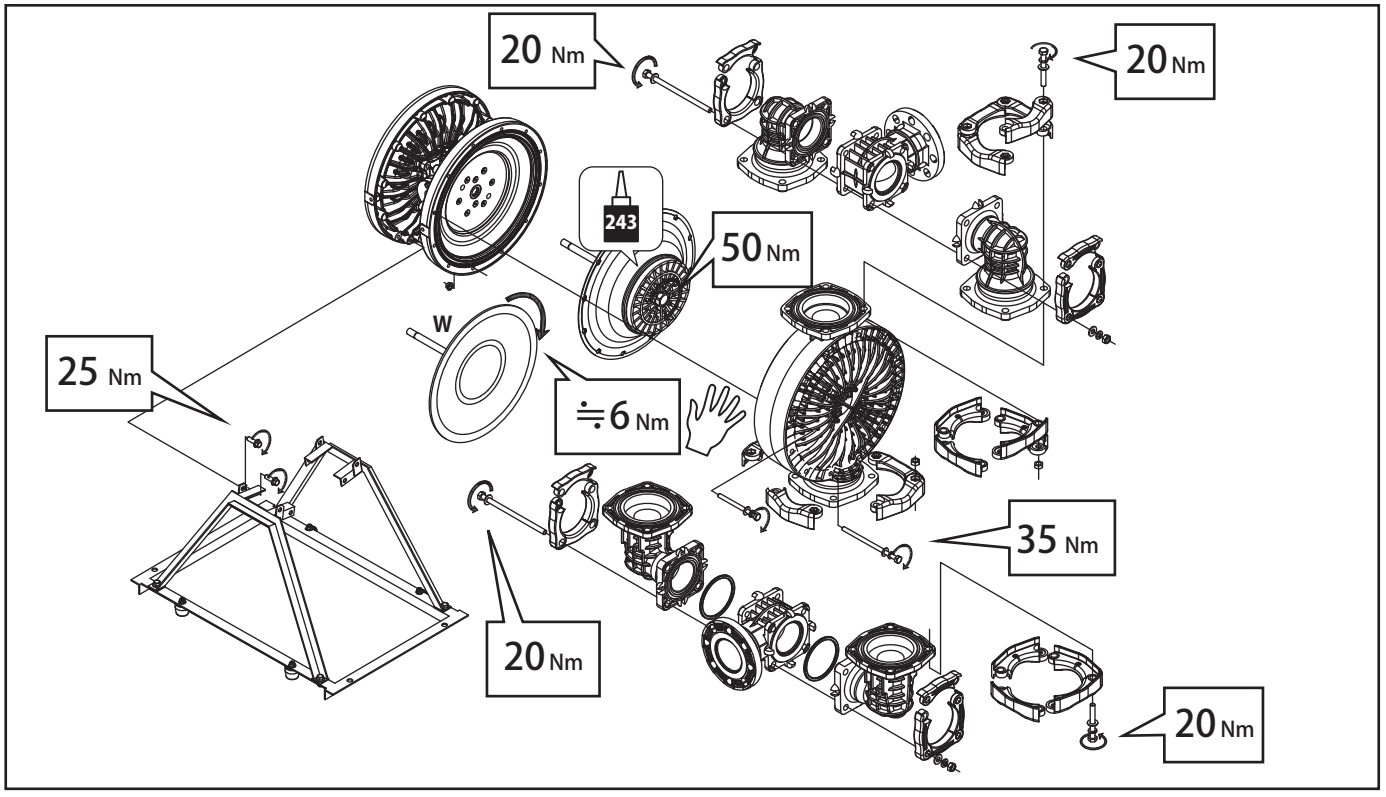

8

8-①②③

