D592SDE-02

DAMPER SERVICE BOOK

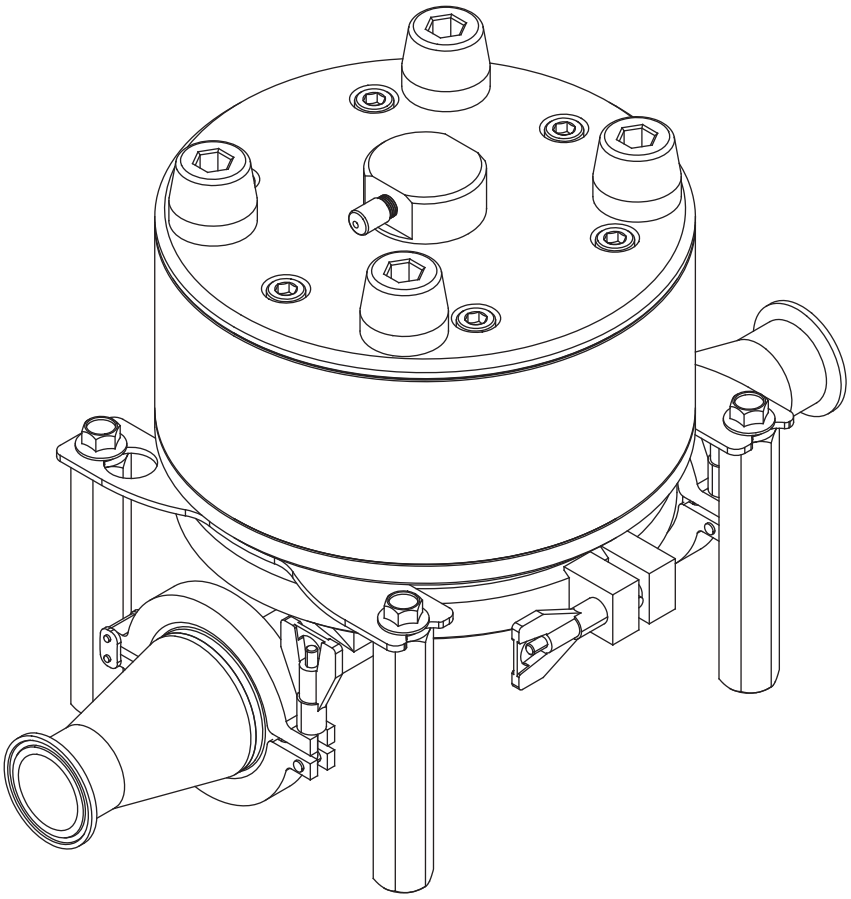

Type 25SWFR

HOW TO USE THE DAMPER SERVICE BOOK

Type 25SWFR

- The servicing method for each damper can be different depending on the model and size. Please refer to the “Model Name” noted on the Damper Identification Label and use the below table as a page number and diagram reference guide.

◎Damper Identification (ID) Label ◎

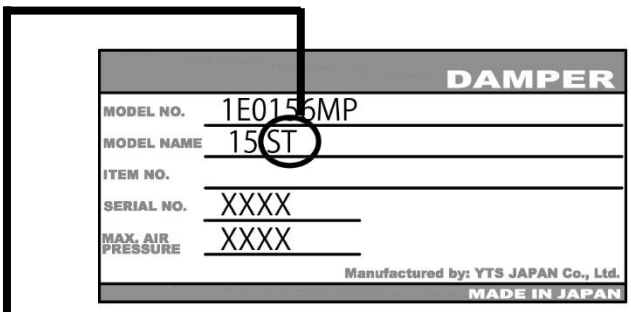

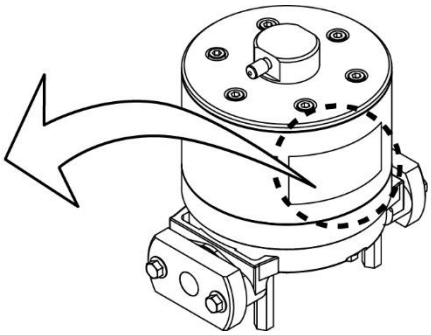

	・DIAPHRAGM	・CENTER DISK DIAPHRAGM Mounting Direction ・CENTER ROD	・BEARING CENTER ROD ・VALVE	※1 ・Exploded View ・Assembly torque values / Re-torque values
Damper Model Code	**Section & Diagram Reference Numbers**			
SWFR	1	2	3	4

※1) Before operating the damper for the first time please re-torque all bolts. Also re-torque bolts if leaks are discovered as part of the daily inspection regime.

Description of Diagrams used within the Damper Service Book

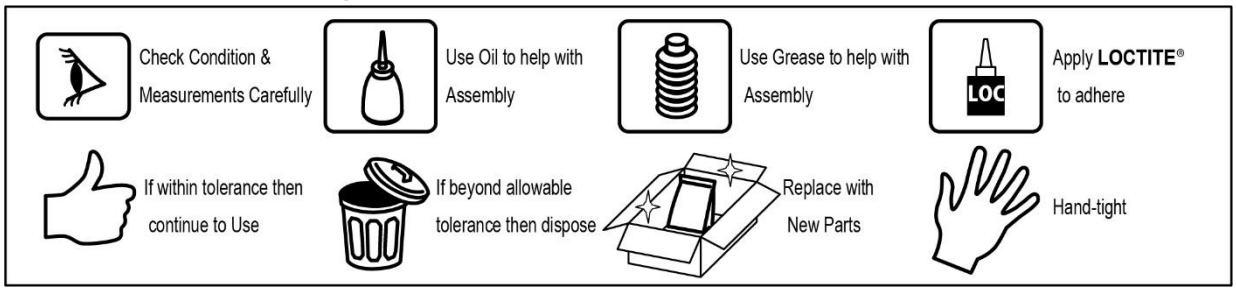

⚠ WARNING

For your own safety and the safety of the people around you, be sure to read the procedures noted within carefully before performing maintenance on this product. After reading this document, be sure to keep it handy for future reference.

⚠ WARNING

Before commencing any maintenance work, disconnect the compressed air supply and remove and clean any remaining liquids contained on around or within the damper. If liquids are not removed or neutralized then there is a possibility of a serious injury such as burns, blindness, poisoning or even death if chemicals adhere to the skin eyes or are accidentally inhaled or swallowed. If residual air pressure is present within the damper there could be a danger of sudden decompression or explosion resulting in severe injury or even death. In case of disassembling, be sure to wear protective equipment, such as face mask, gloves, etc. When replacing spare parts, be sure to use genuine parts. The installation and use of non-specified parts may cause a malfunction or damage to the product.

Service Tools

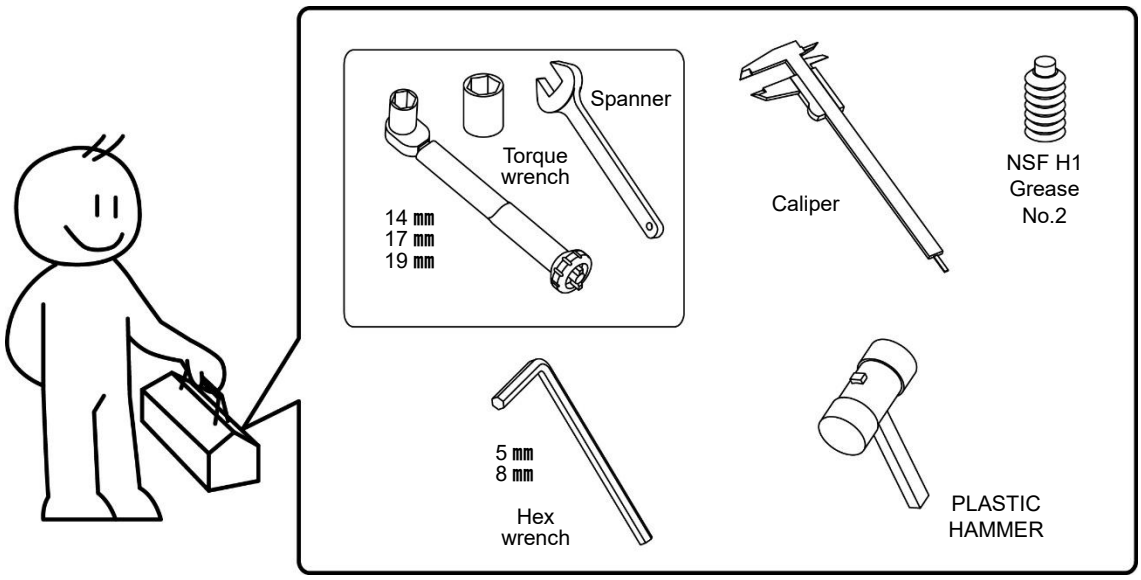

Recommended changeover time for the replacement of diaphragms ※

PTFE･EPDM	40 million cycles

※ Conditions: with water at room temperature and 0m head.
Conditions such as over pressurization, dry running, high or low temperature, chemical attack, abrasion etc. can drastically shorten diaphragm's life.

※ O rings and packings should be replaced during the service.

※ When reassembling the damper, please follow the disassembly procedure in reverse. For all torque values, refer to the exploded view on Section 4.

※ When ordering spare parts, please refer to the damper "SERIAL No." stated on the Identification label.

※ It is recommended to apply lubricant to the sliding parts.

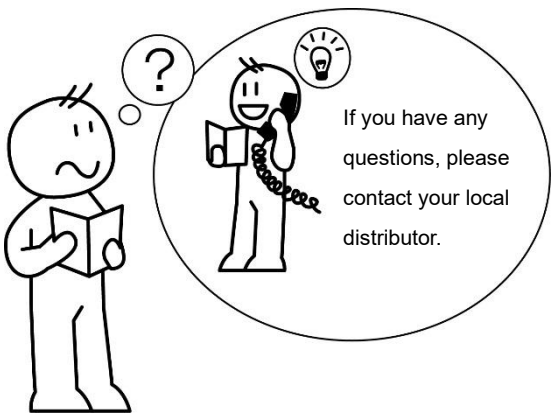

YTS Japan Co., Ltd reserves the right to change damper specifications at any time without notice.

Retightening

1. Before starting operation.

2. At quarterly inspections after installation. (Biannual if the room temperature, is maintained within ±5℃.)

3. When restarting damper operation, if the liquid or room temperature has changed significantly.

4. If you find fluid leakage on daily inspection.

1

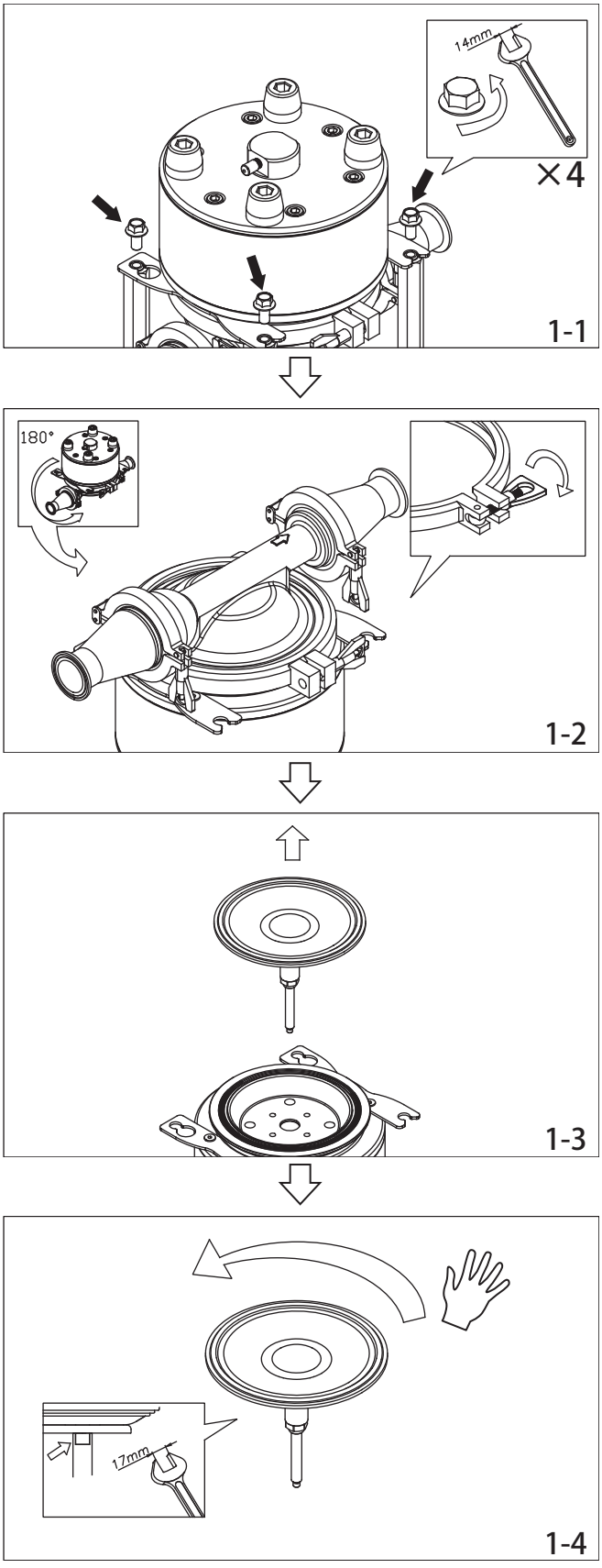

2

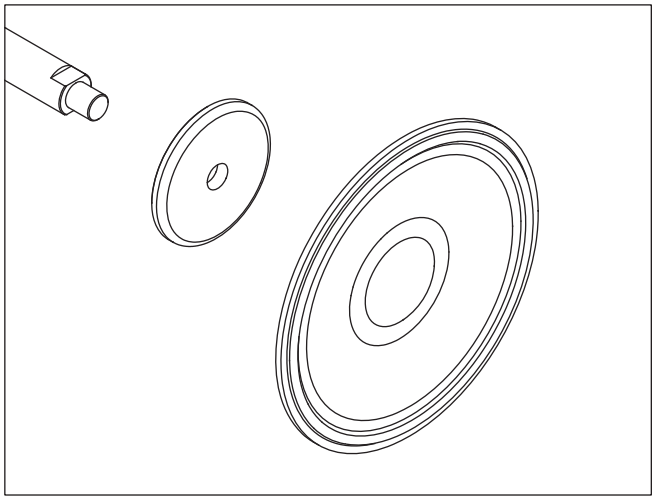

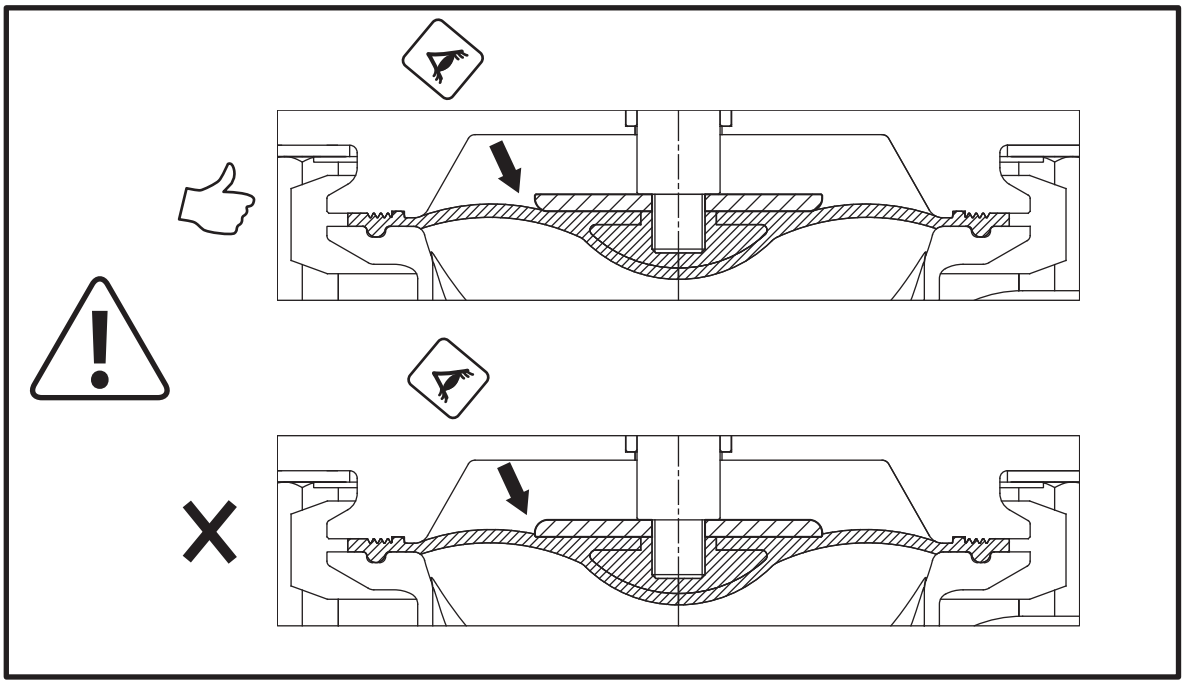

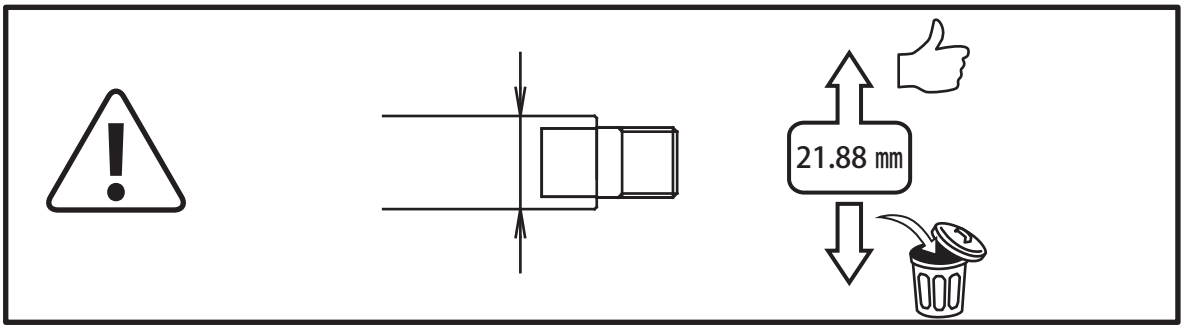

3

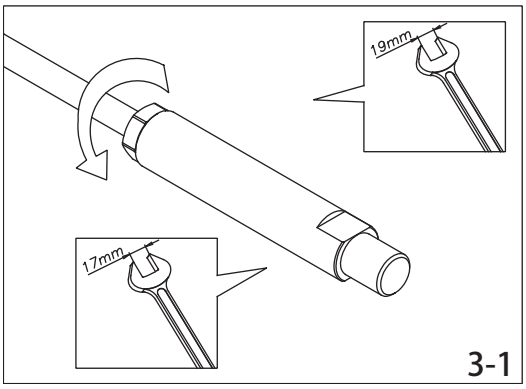

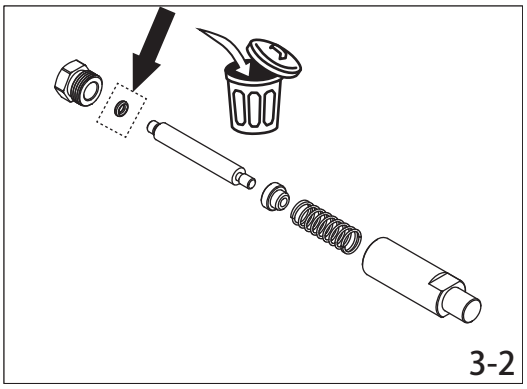

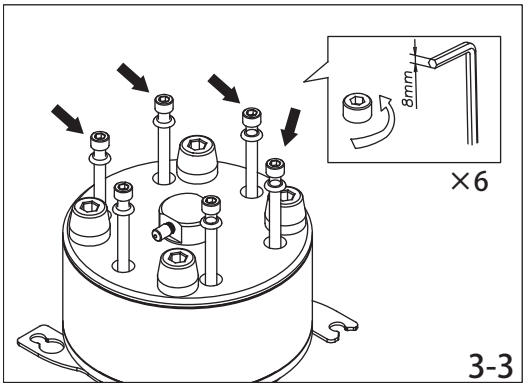

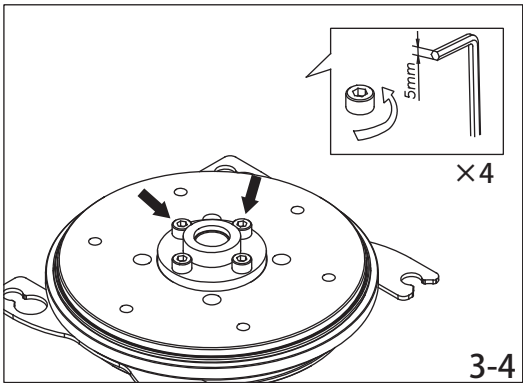

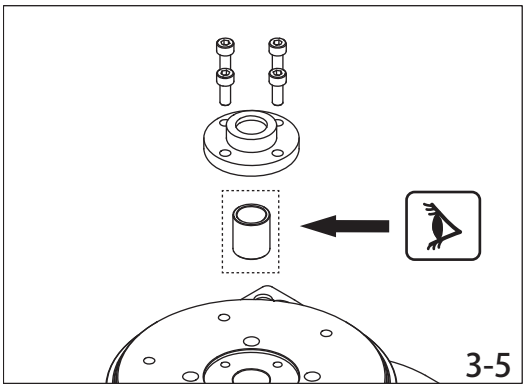

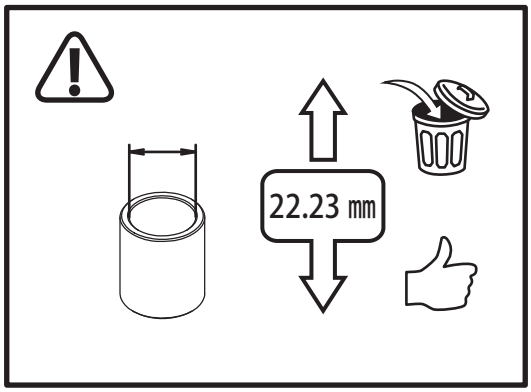

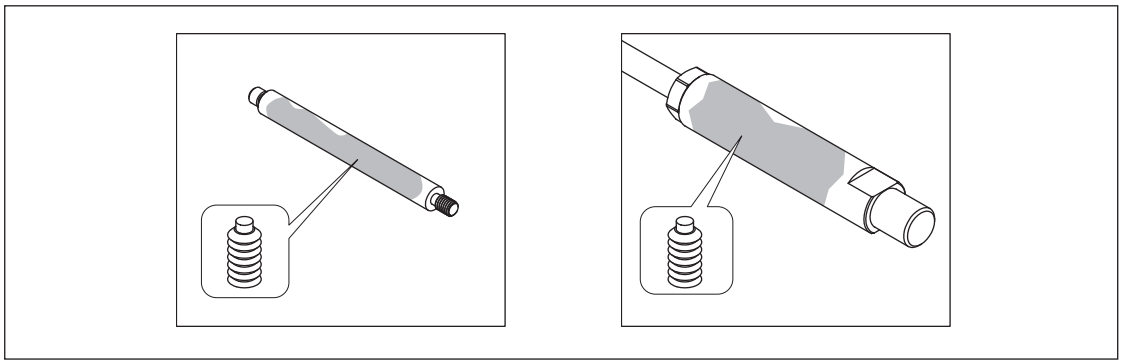

4 25AWFR

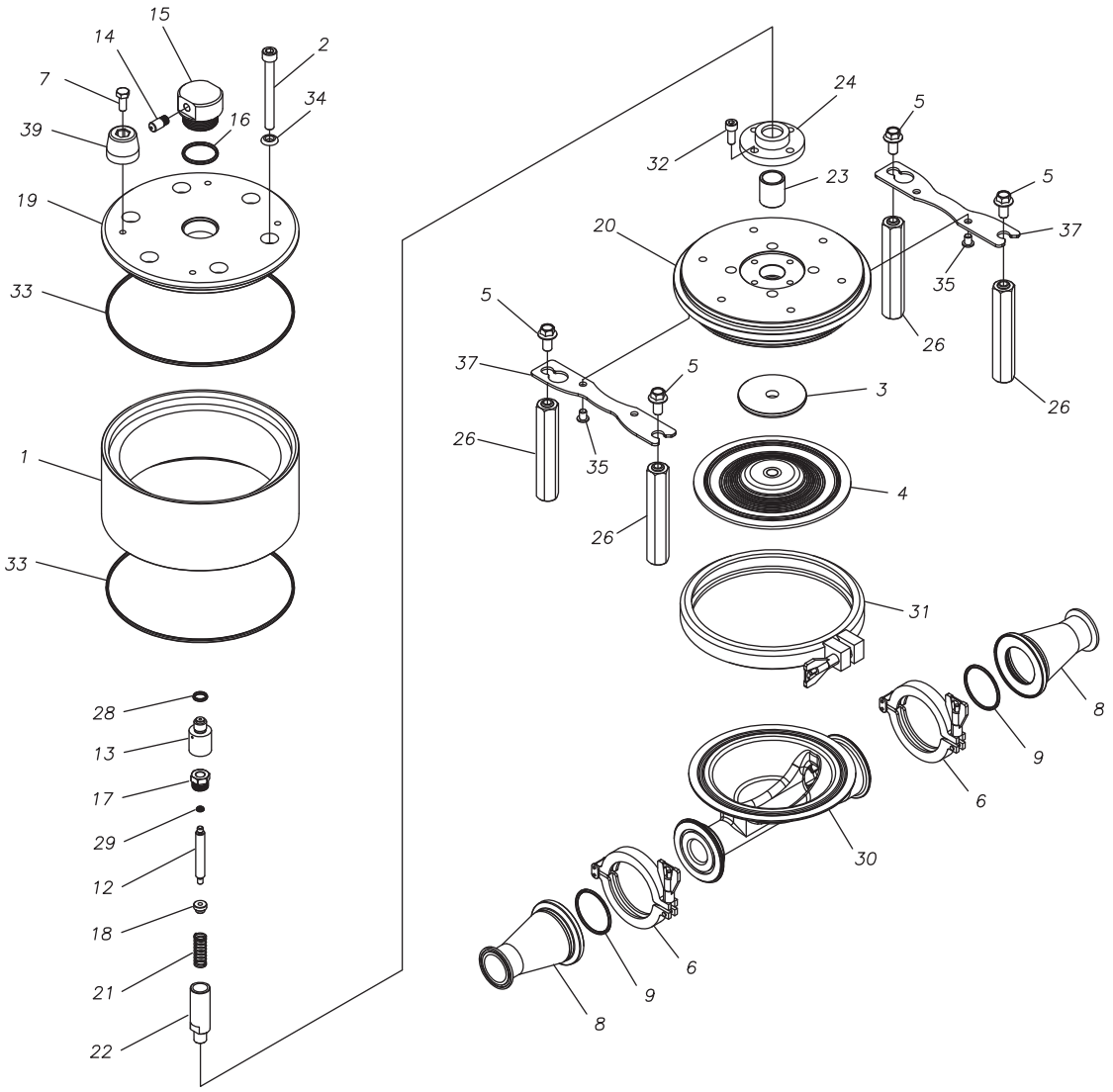
15
14
2
7
34
39
16
19
33
1
33
28
13
17
29
12
18
21
22
24
5
32
23
5
20
37
35
26
5
37
5
3
26
35
26
4
26
31
8
9
6
30
6
9
8

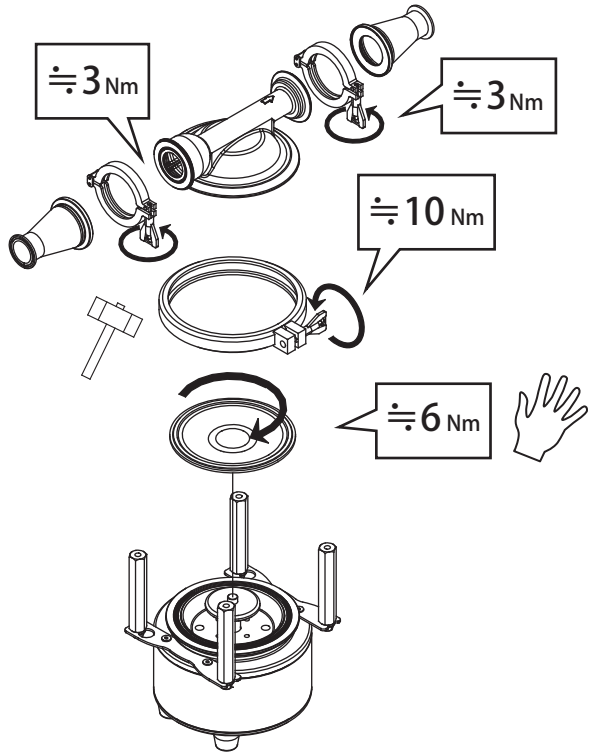
≒3 Nm
≒3 Nm
≒10 Nm
≒6 Nm